BeoSound 3000

Type 2671, 2672, 2673, 2674, 2675, 2676, 2677, 2680

Service Manual

English, German, French, Italian, Spanish

ABO-CENTER V/HENRIKSENS ELEKTRONIK

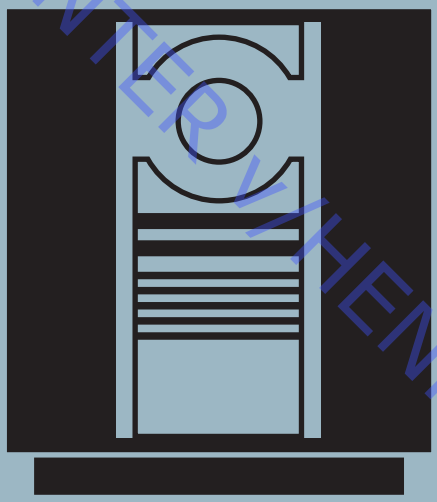

BANG & OLUFSEN

2 Interface f/µPH8 ..... diagram E
page 2.14

3 µPH8 Microcomputer ..... diagram E
page 2.14

5 Display ..... diagram F, M
page 2.15, 2.25

9 Light and motor control ..... diagram F
page 2.15

12 Power Supply, Input select & Pre-amp. .....diagram G, H, I
page 2.17, 2.18, 2.19

14 Master Link Audio interface ..... diagram H
page 2.18

15 Transformer ..... diagram I
page 2.19

18 Headphone ..... diagram G
page 2.17

20 IR receiver and left door sensor ..... diagram F, J
page 2.15, 2.21

21 Door sensor right .....diagram J
page 2.21

28 Light supply ..... diagram F
page 2.15

86 Tuner-FM/AM-RDS-Stereo decoder ..... diagram A, B, C, D
page 2.9, 2.10, 2.11, 2.12

89 Interface f/CD PRO MKI .....diagram K
page 2.23

99 CD PRO MKI ..... diagram L
page 2.24

ABO-CENTER V/HENRIKSENS ELEKTRONIK

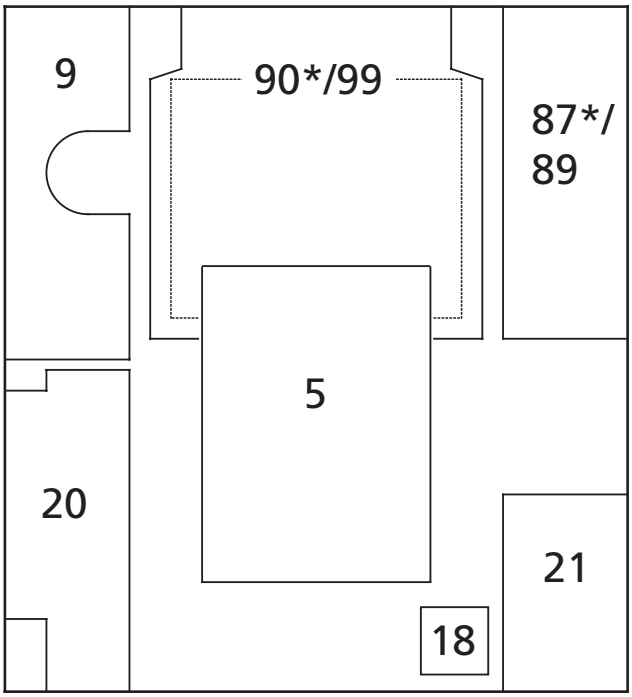

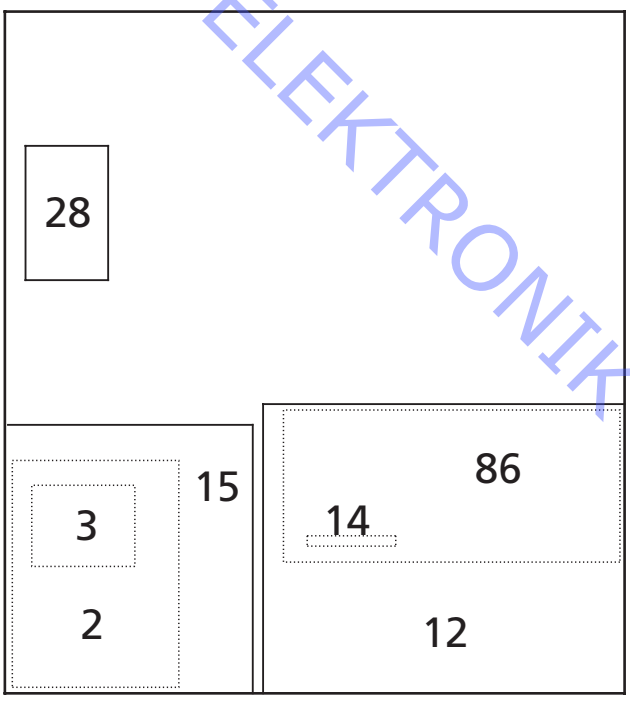

* for CD PRO MKII

SPECIFICATION GUIDELINES FOR SERVICE USE	BeoSound 3000
With FM, AM and RDS	Type 2671 EU (230V)
	Type 2672 GB (240V)
	Type 2673 USA-CDN (120V)
	Type 2674 J (100V)
	Type 2675 AUS (240V)
	Type 2676 TWN (120V)
	Type 2677 KOR (220V)
	Type 2680 LAT (230V)
Preamplifier section	
Total harmonic distortion + Noise R,L	< 0.1%/1 kHz
Response vs. frequency:	
AUX in	20-20,000Hz ±1dB
Input sensitivity/impedance	
AUX	200 mV
Input impedance, AUX	>22 kΩ
Max. input signal, AUX	2.0 V
Signal-to-noise ratio:	
AUX, A-weighted	>80 dB
Channel separation 10kHz, AUX	>60 dB
Channel unballance	±1.5 dB
Bass control at 100Hz	±9 dB
Treble control at 10kHz	±9 dB
Output:	
Source seperation	>65 dB
Tone regulation Bass, 100 Hz	9.0 dB ± 2 dB
Tone regulation Treble 10 kHz	9.0 dB ± 2 dB
Headphones	3.5 V / 235 Ω
Tuner, FM section	
FM range (50 kHz grid)	87.5-108 MHz
FM range for type 2674 - Japan	76-90 MHz
FM aerial impedance	75 Ω
Usable sensitivity mono	14 dBf - 1.4 µV
Usable sensitivity stereo	19 dBf - 2.5 µV
50 dB quieting sensitivity mono	21 dBf - 2.5 µV
50 dB quieting sensitivity stereo	40 dBf - 28 µV
Signal-to-noise ratio mono	68 dB
Signal-to-noise ratio stereo	62 dB
Frequency response stereo	30 - 15,000 Hz +1/-3 dB
THD + noise mono	0.63 %
THD + noise stereo	0.6 %
Intermodulation distortion stereo	50 dB
Stereo channel separation	35 dB
Subcarrier product rejection	50 dB, stereo
Tuner, AM section	
AM range EU (9 kHz grid)	LW 153 - 279 kHz
	MW 522 - 1611 kHz
GB (9 kHz grid)	LW 153 - 279 kHz
	MW 522 - 1611 kHz
USA MW (10 kHz grid)	520 kHz - 1710 kHz
Japan MW (9 kHz grid)	522 kHz - 1629 kHz
AUS MW (9 kHz grid)	522 kHz - 1611 kHz
Taiwan MW (9 kHz grid)	522 kHz - 1611 kHz
Korea MW (9 kHz grid)	522 kHz - 1611 kHz
LW sensitivity 20 dB S/N ratio	80 - 72 dBµV/m (10 - 4 mV/m) TYP 4mV/meter
MW sensitivity 20 dB S/N ratio	68 - 60 dBµV/m (2.5 - 1mV/m) TYP 2mV/meter
Number of programmes	60
IR Operation	Beo4

ABC-CENTER V/HENRIKSENS ELEKTRONIK

CD player	
CD, disc types	12 cm (5"), 8 cm (3")
Frequency response	20 - 20,000 Hz ±1 dB
SNR (digital zero)	>96 dB / 101 dB A-weighted
Dynamic range	>98 dB
Channel difference	±0.3 dB
D/A converter	Bitstream + Analog filter

Dimensions	
W x H x D / Weight	32 x 36 x 16 cm / 7 kg
Cabinet finish	Black / aluminium
Power consumption	Typical 23 watts / stand-by 3 watts

Accessories	
Type 2051	Stand, silver, black, blue, green, red
Type 2052	Center wall bracket, black
Type 2087	System wall bracket, black
V-antenna with coax cable	8720039
AM loop antenna	8720043

Connections

Master Link

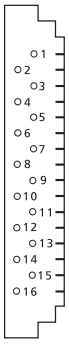

Pin 1	Data- -0.25V
Pin 2	Data+ +0.25V
Pin 3	ML sence 0-5V
Pin 4-10	N.C.
Pin 11	Supply voltage -7V > -15V, stand-by -3V > -15V
Pin 12	Supply voltage 7V > 15V, stand-by 3V > 15V
Pin 13	Audio L-
	1V bal., R_{in} 2.2MΩ, R_{out} 75Ω
Pin 14	Audio L+
	1V bal., R_{in} 2.2MΩ, R_{out} 75Ω
Pin 15	Audio R-
	1V bal., R_{in} 2.2MΩ, R_{out} 75Ω
Pin 16	Audio R+
	1V bal., R_{in} 2.2MΩ, R_{out} 75Ω

Audio Aux Link

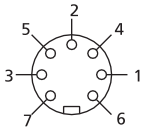

Pin 1	Audio L out 1V RMS, Rout 1KΩ
Pin 2	GND
Pin 3	Audio L in 0.25V RMS to 2V RMS, Rin 47KΩ
Pin 4	Audio R out 1V RMS, Rout 1KΩ
Pin 5	Audio R in 0.25V RMS to 2V RMS, Rin 47KΩ
Pin 6-7	Not used

Power Link

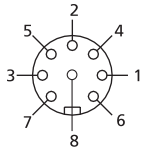

Power up (ON = >2.7V -1mA)	
Pin 2	Signal GND
Pin 3	Audio L out 0V to 2V RMS
Pin 4	Speaker ON (ON = >2.7V -1mA)
Pin 5	Audio R out 0V to 2V RMS
Pin 6	Datalink out (High = >4V, Low = <0.2V)
Pin 7	Data GND
Pin 8	PL+ ON

Headphones — 4.1V / 235Ω

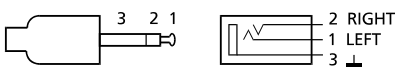

Mains — Cable included,

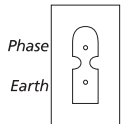

100V AC, J type 2674
120V AC, USA-CDN type 2673-2676
220V AC, KOR type 2677
230V AC, EU-LAT type 2671-2680
240V AC, GB-AUS type 2672-2675

Subject to change without notice

ABC-CENTER V/HENRIKSENS ELEKTRONIK

Wiring of transformer, PCB15

Type 2671, 2677, 2680
EU, LAT 230V~
KOR 220V~

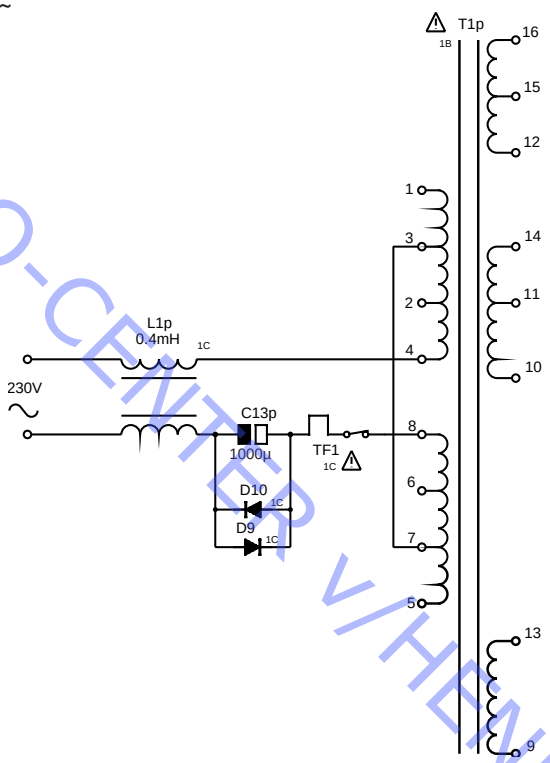

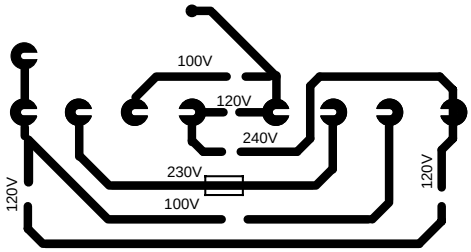

Type 2672, 2675
GB, AUS 240V~

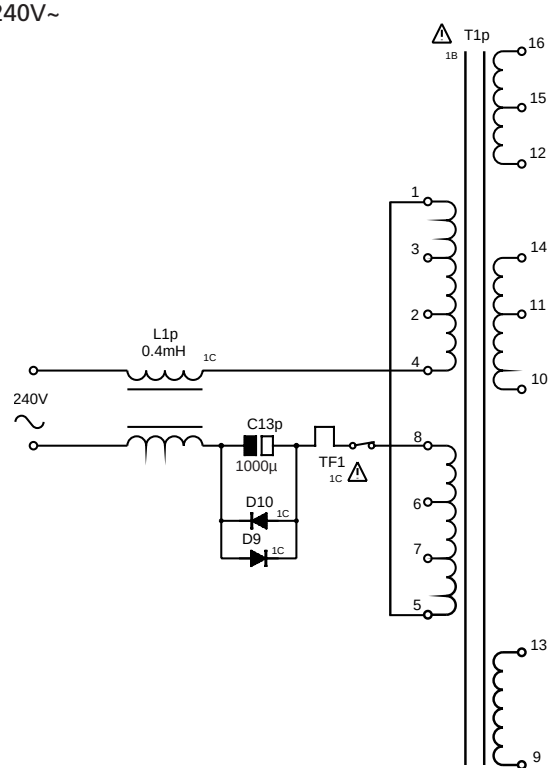

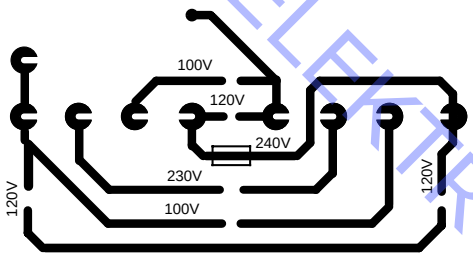

ABO-CENTER V/HENRIKSENS ELEKTRONIK

Type 2673, 2676
USA-CDN, TWN 120V~

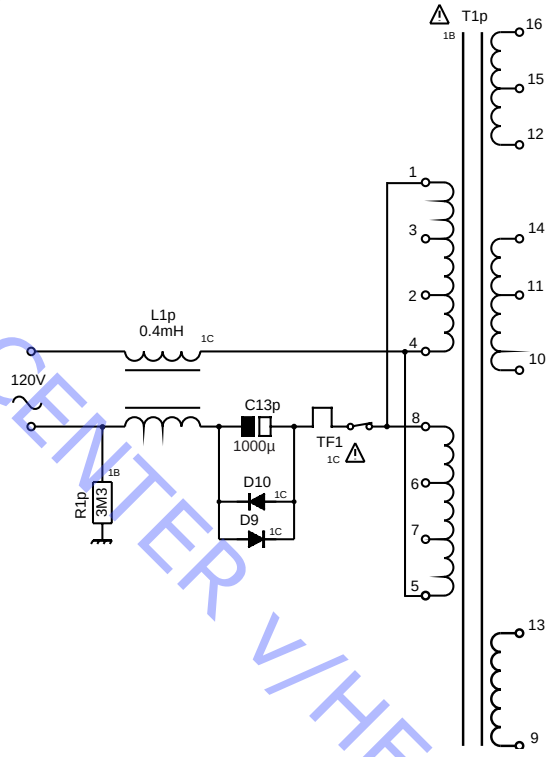

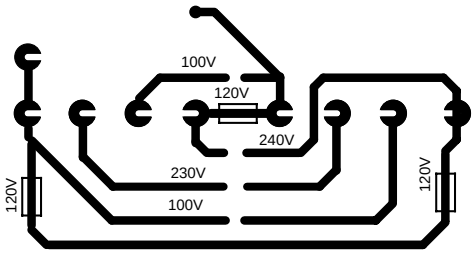

Type 2674
JPN 100V~

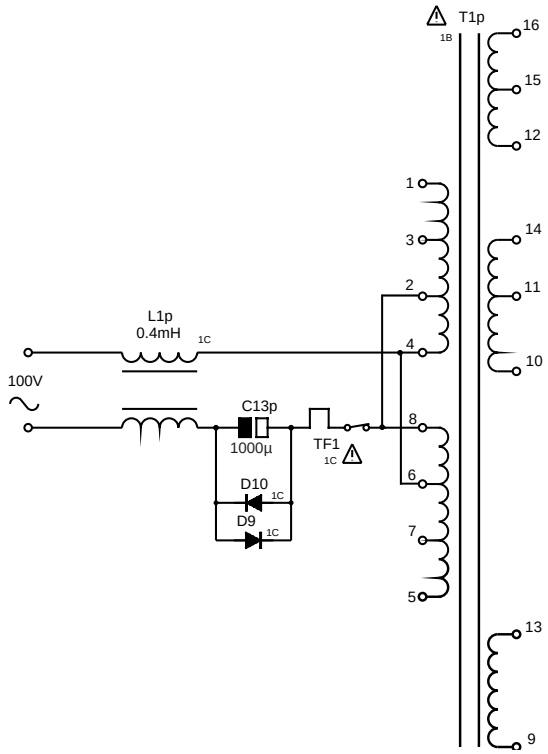

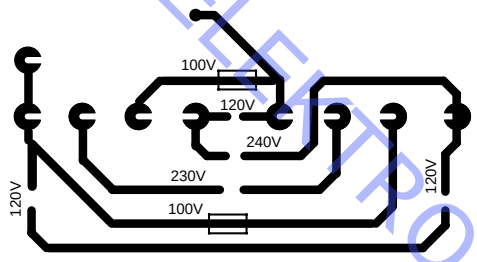

ABO-CENTER V/HENRIKSENS ELEKTRONIK

Brief operation guide

For more detailed operation see User's guide

Tune in radio stations

RADIO	Press RADIO to switch on the radio
TUNE FM ?	Press TUNE to access the tuning function. FM ? appears
▲ ▼	Switches from FM to AM, or vice versa
PLAY FM 88.9	Press PLAY to select AM or FM. FM or AM and the current frequency appears
▲ ▼	Press to search for a radio station – up or down the frequency band
0 – 9	Or, key in the exact frequency
PLAY FINE 0	Press PLAY to accept*. FINE 0 appears
▲ ▼	Press to fine tune, if necessary
PLAY STEREO ?	Press PLAY to accept. STEREO ? appears
▲ ▼	Switches from STEREO to MONO
PLAY P 15 ?	Press PLAY to accept – the first available program number appears
▲ ▼	Press to switch to a different program number
0 – 9	Or, key in the program number you want
PLAY STORED	Press PLAY to store the station on the displayed program number. STORED appears, indicating that the station is stored

*Note: When the requested station is found, you can skip the fine tune and stereo/mono selection by pressing STORE instead of PLAY. Now just enter a program number and press PLAY or STORE to store the station.

Switch on the radio

RADIO	Press RADIO to switch on the radio
0 – 9	Use the number keys to select a stored station
▲ ▼	Step through all stored stations
•	Switch to standby
^ v	Adjust the volume up or down
MUTE	Silences the speakers immediately. Press again to recall the sound

Note: Pressing 0 will swap between present and previous radio station

Play a CD

CD	Plays the CD in the compartment
0 – 9	Plays specific track numbers
▲	Plays the next track
▼	Plays the previous track
STOP	Pauses playing
PLAY	Resumes playing
▶▶	Searches forwards on the CD
◀◀	Searches backwards on the CD
	Keep the button pressed down until you have reached the point you want

ABO-CENTER V/HENRIKSENS ELEKTRONIK

Set the built-in clock

CLOCK 14 : 45	Press CLOCK to access the clock function. The time appears
▲ ▼	Press to change to the exact time, if necessary
0 – 9	Alternatively key in the exact time
PLAY 23 AUG	Press PLAY to accept. The date appears
▲ ▼	Press to change the date, if necessary
PLAY 2000	Press PLAY to accept. The year appears
▲ ▼	Press to change the year, if necessary
PLAY STORE ?	Press PLAY to accept. STORE ? appears
STORE STORED	Press STORE to store the new setting. STORED appears

Using the Beo4

RADIO	Turns on the radio
CD	Starts the CD player
▲ or ▼	Press to step through your radio programs or tracks on a CD
	Alternatively, key in the exact number, using the number keys
⏩	Searches through a CD
or	
⏪	Searches backwards through a CD
STOP	Pauses playback any time
GO	Press to resume playback
^	Raises the volume
v	Lowers the volume
●	Switches off

Option programming

For the Beo4 terminal the key sequence is the following:

●	Press and hold
then	
LIST	Press to access the setup function. The Beo4 display reads [OPTION?] - let go of both buttons
GO	Press to access *Option*-programming
LIST	Press to display [V.OPT] CTV, or [A.OPT] audio, or [L.OPT] link room products
then	
1	Key in the number of the approiate *Option,* e.g. 1

The digit sequence to be used depends on the setup.

Option 0 = No IR reception
Option 1 = Two IR-eyes in the same main room
Option 2 = One IR-eye in the main room

ABO-CENTER V/HENRIKSENS ELEKTRONIK

Explanation of diagram

Type numbers of transistors and ICs are indicated on the diagrams. If the position is followed by an asterisk the spare part number must always be used because the component in question has been specially selected, e.g. TR102*.

Component print and coordinate system

The largest PCBs have component prints and a coordinate system on both the print and the component side.
On the diagrams every component has a coordinate number. This indicates in which coordinate on the PCB the component is situated. The coordinate numbers are written in smaller print types than the position numbers.

Control circuit

In certain control circuits the active mode is indicated by a function term or by an abbreviation. This may be e.g. ST.BY. = low in the stand-by mode or $\overline{\text{ST.BY.}}$ = high in the stand-by mode.

Wiring connections

The wiring connections on the diagrams are assembled in 'bundles'. The individual wires are provided with one of the following codes:

INTERNAL CONNECTION ON ONE DIAGRAM PAGE

Internal connections on a diagram page are indicated by a number.
The bend of the wire indicates in wich direction the other end of the wire is found.

CONNECTION TO ANOTHER DIAGRAM PAGE

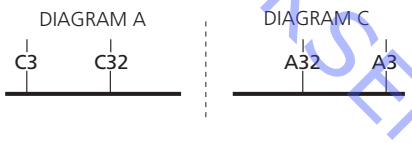

A connection to another diagram page is indicated by a number as well as by a letter of the diagram to which the connection leads.

Supply Voltages

All supply voltages in the diagrams are indicated by an arrow and a voltage indication.

Ground symbols

Three different ground symbols are used in the set.

= RF - OSC - SH - IF1 - IF2 - A

= Chassis

= D

Symbol of safety components

When replacing components with this symbol, components with identical part numbers must be used. The new component must be mounted in the same way as the one replaced.

ABO-CENTER V/HENRIKSENS ELEKTRONIK

Measuring conditions

All DC voltages have been measured in relation to ground with a voltmeter with an input impedance of 10 Mohms.
The DC voltages are stated in volts (V), e.g. 0.7V.
All oscillograms and AC voltages have been measured in relation to ground with an oscilloscope or a voltmeter with an input resistance of 1Mohm.
AC voltages are stated in millivolts (mV), e.g. 660mV.

Caution

The use of any controls, adjustments or procedures other than those specified herein may result in hazardous radiation exposure.

CLASS 1
LASER PRODUCT

COMPACT disc DIGITAL AUDIO

The black and yellow label on the compact disc player serves as a warning that the apparatus contains a laser system and is classified as a class 1 laser product. The apparatus must be opend by qualified servicemen only.

CD laserdiode

Wavelenght	780 nm ±20 nm, 30°C
Effect	2 mW ±0.1 mW, 30°C

Lithium battery

ADVARSEL
LITHIUMBATTERI - EKSPLOSIONSFARE
UDSKIFTNING MÅ KUN FORETAGES AF EN SAGKYNDIG OG SOM BESKREVET I SERVICE MANUAL

WARNING
LITHIUM BATTERY - RISK OF EXPLOSION
TO BE REPLACED BY QUALIFIED SERVICEMAN ONLY AND AS DESCRIBED IN THE MANUAL

WARNING
Short-circuit and overcharging of some types of lithium batteries may result in a violent explosion.
When replacing the lithium battery in this set, note the following:
Use only batteries at the same make and type as mentioned in this service manual (see page 3.1).
Place the battery exactly like the old one.

Explanation of the fuse symboles used in the set

Replace with the same type 1 ampere 250 volts quick acting fuse.

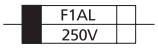

Replace with the same type 2.5 ampere 250 volts slow acting fuse.

Explanation des symboles de fusible utilisés dans l'appareil

Remplacer par un fusible rapide de même type et de 1 ampères 250 volts.

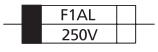

Remplacer par un fusible retardè de même type et de 2.5 ampères 250 volts.

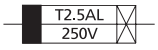

ABO-CENTER V/HENRIKSENS ELEKTRONIK

Wiring diagram

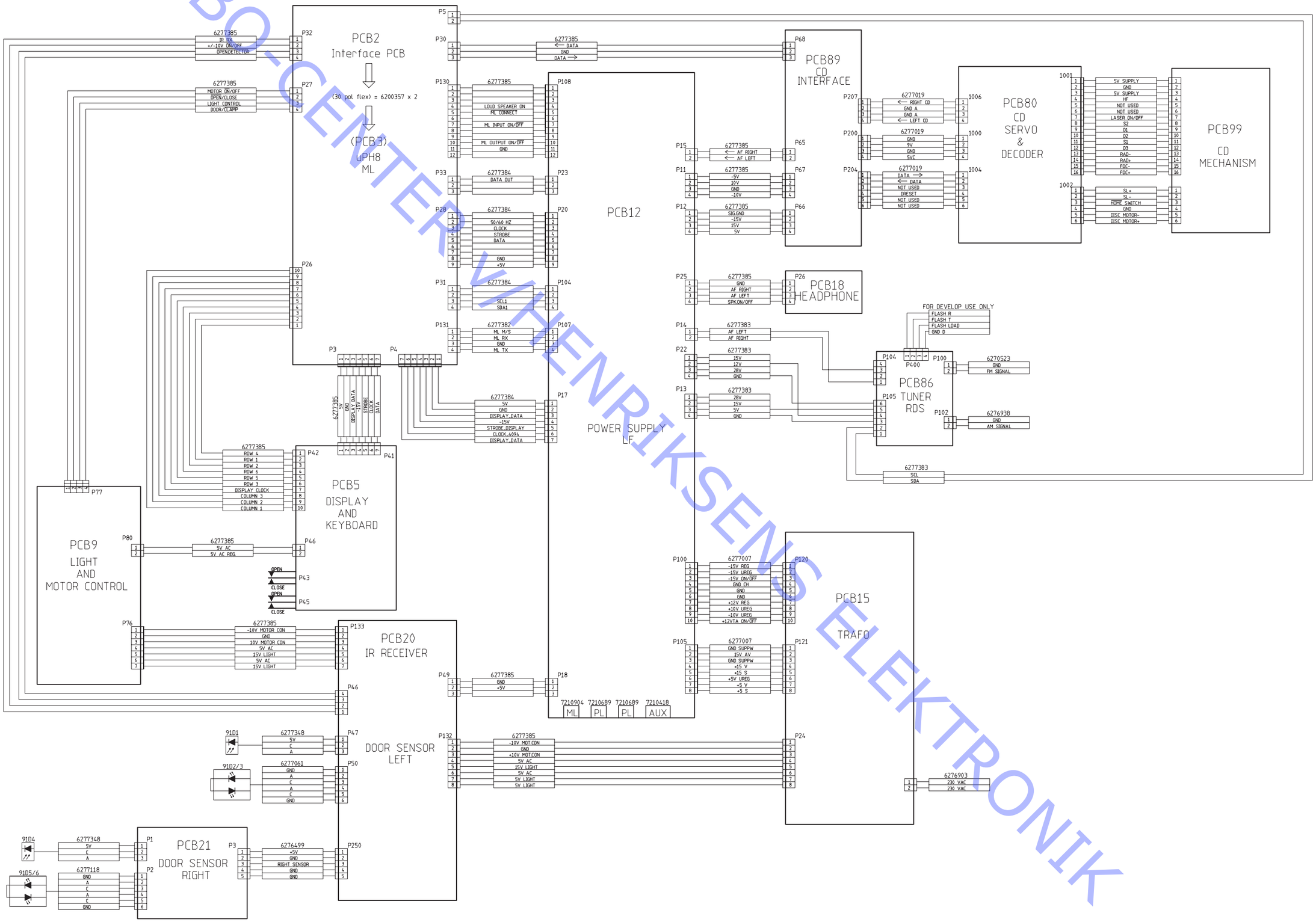

ABO-CENTER V/HENRIKSENS ELEKTRONIK

Block diagram for frontend tuner

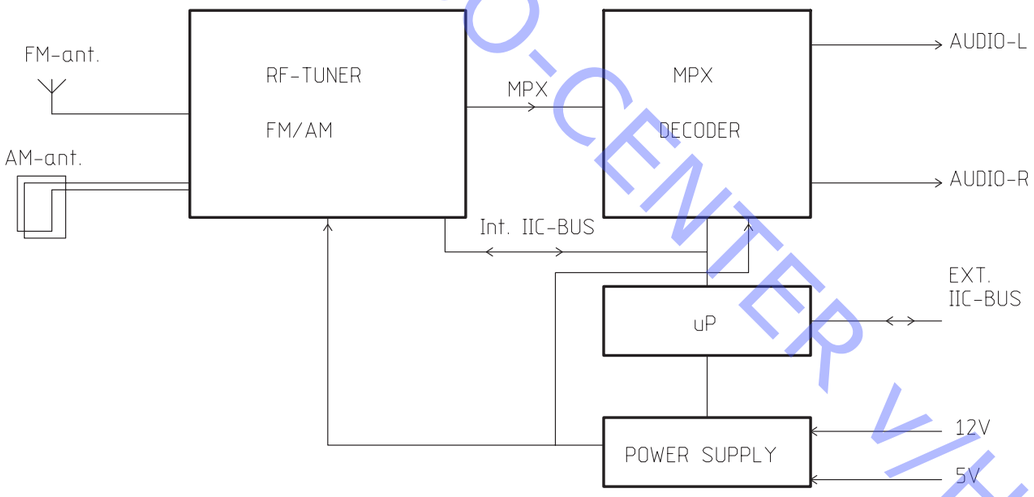

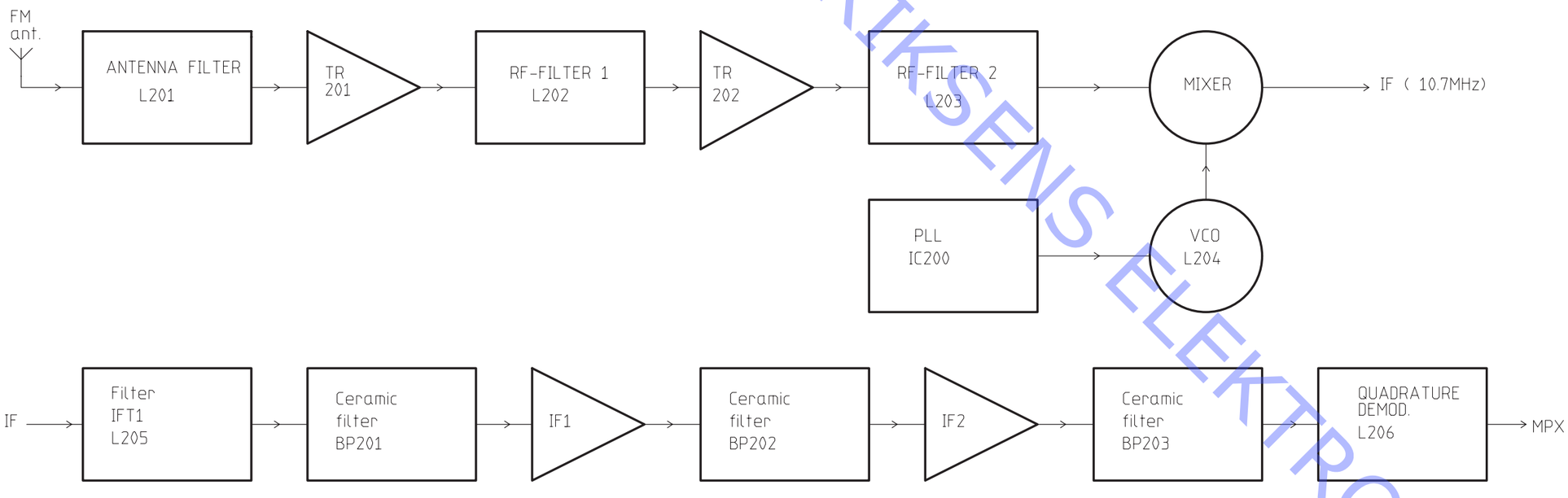

ABO-CENTER V/HENRIKSENS ELEKTRONIK

AM block diagram

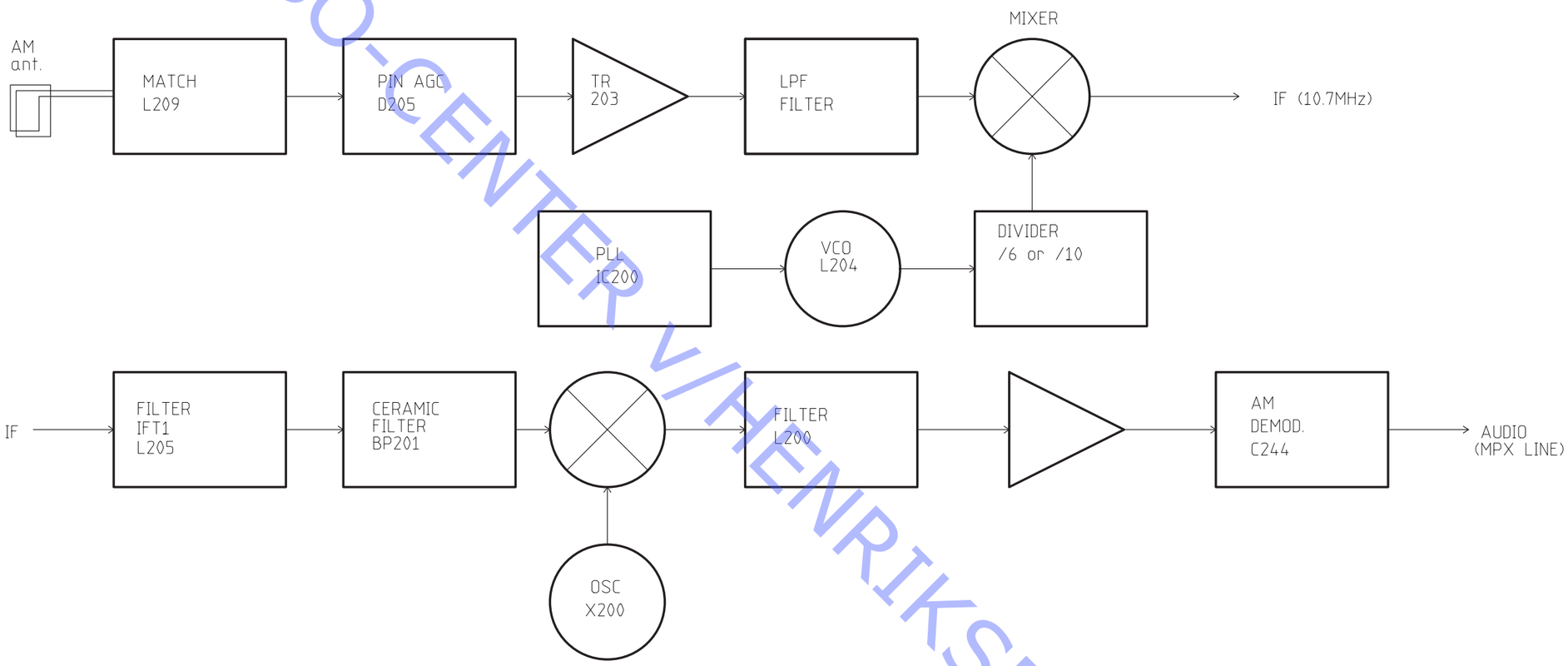

ABO-CENTER V/HENRIKSENS ELEKTRONIK

Block diagram for CD PRO

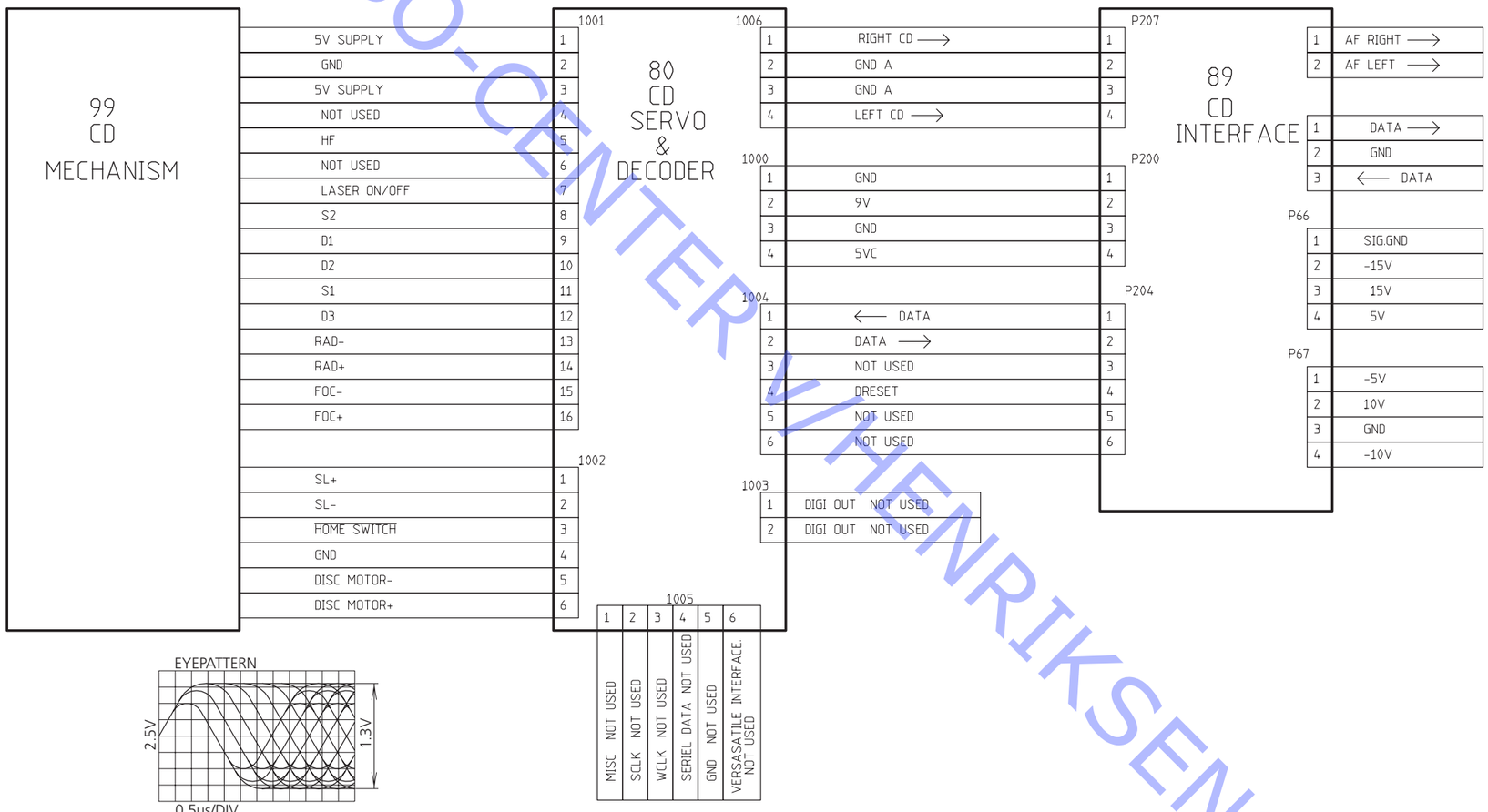

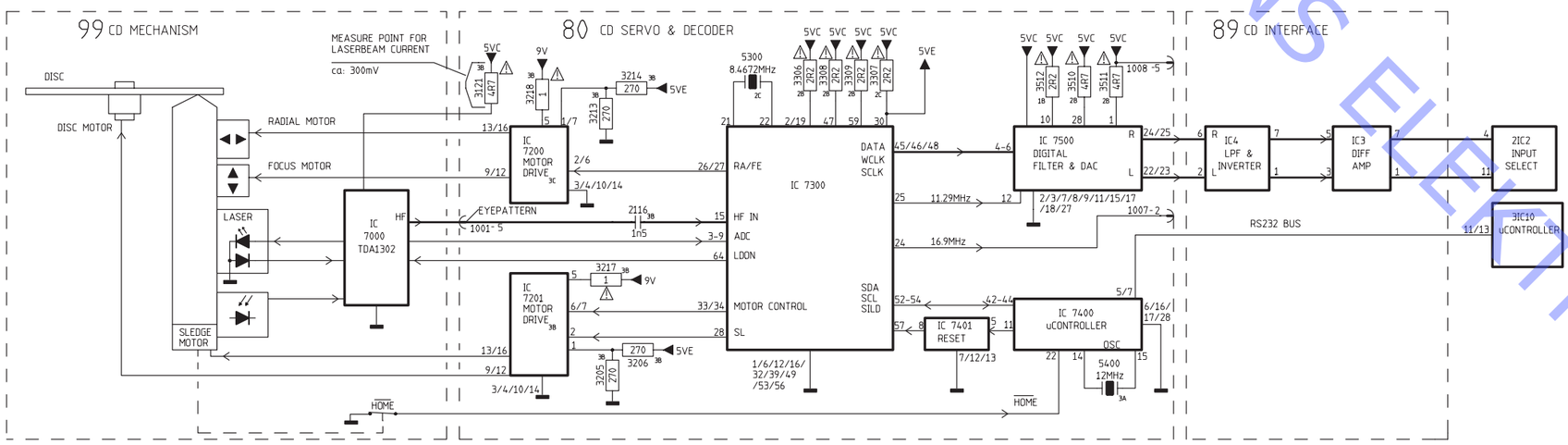

ABO-CENTER V/HENRIKSENS ELEKTRONIK

Block diagram for system key controle

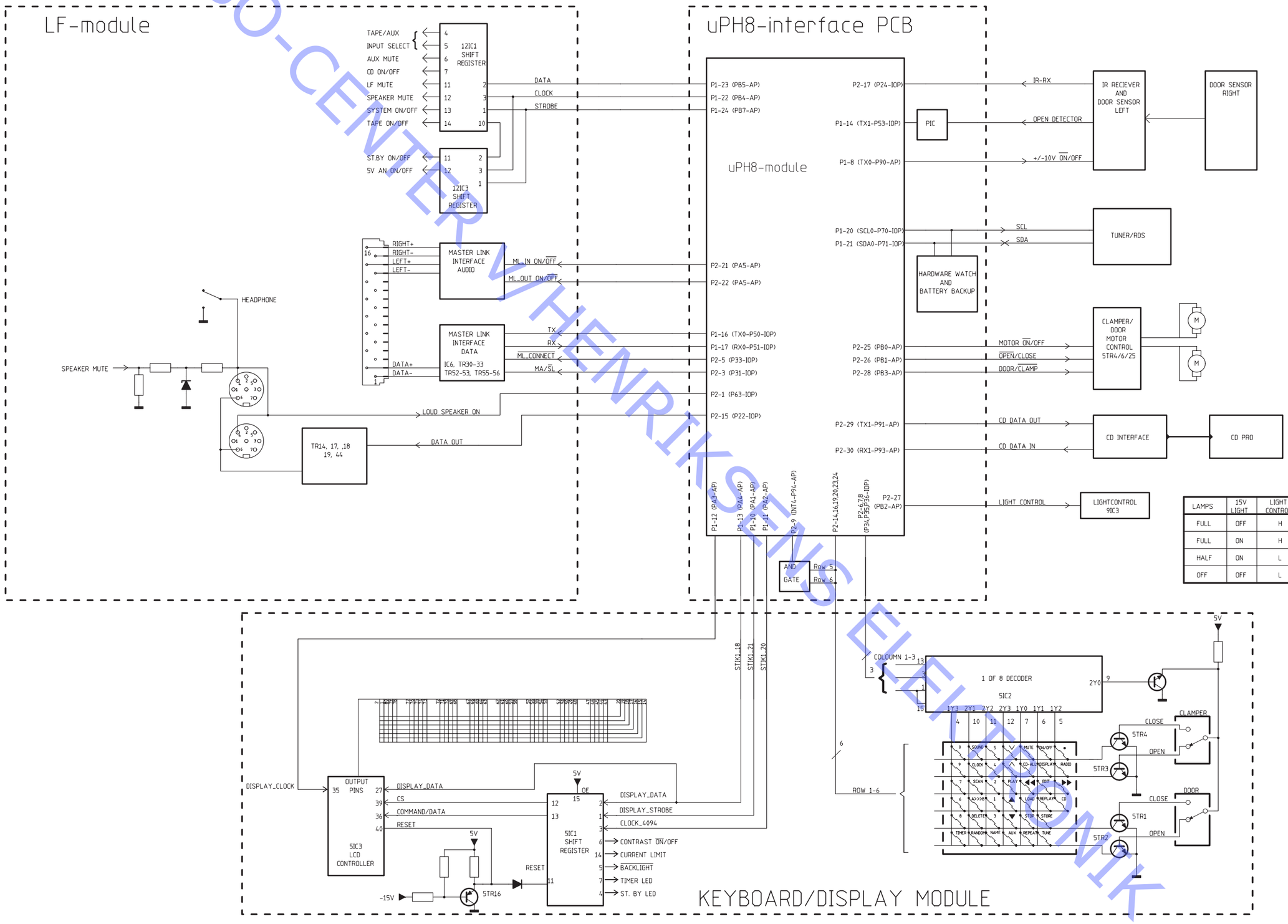

ABO-CENTER VHENRIK'S ELEKTRONIK

Diagram A – Frontend tuner PCB drawing for PCB86 see page 2.13

ABO-CENTER V/HENRIKSENS ELEKTRONIK

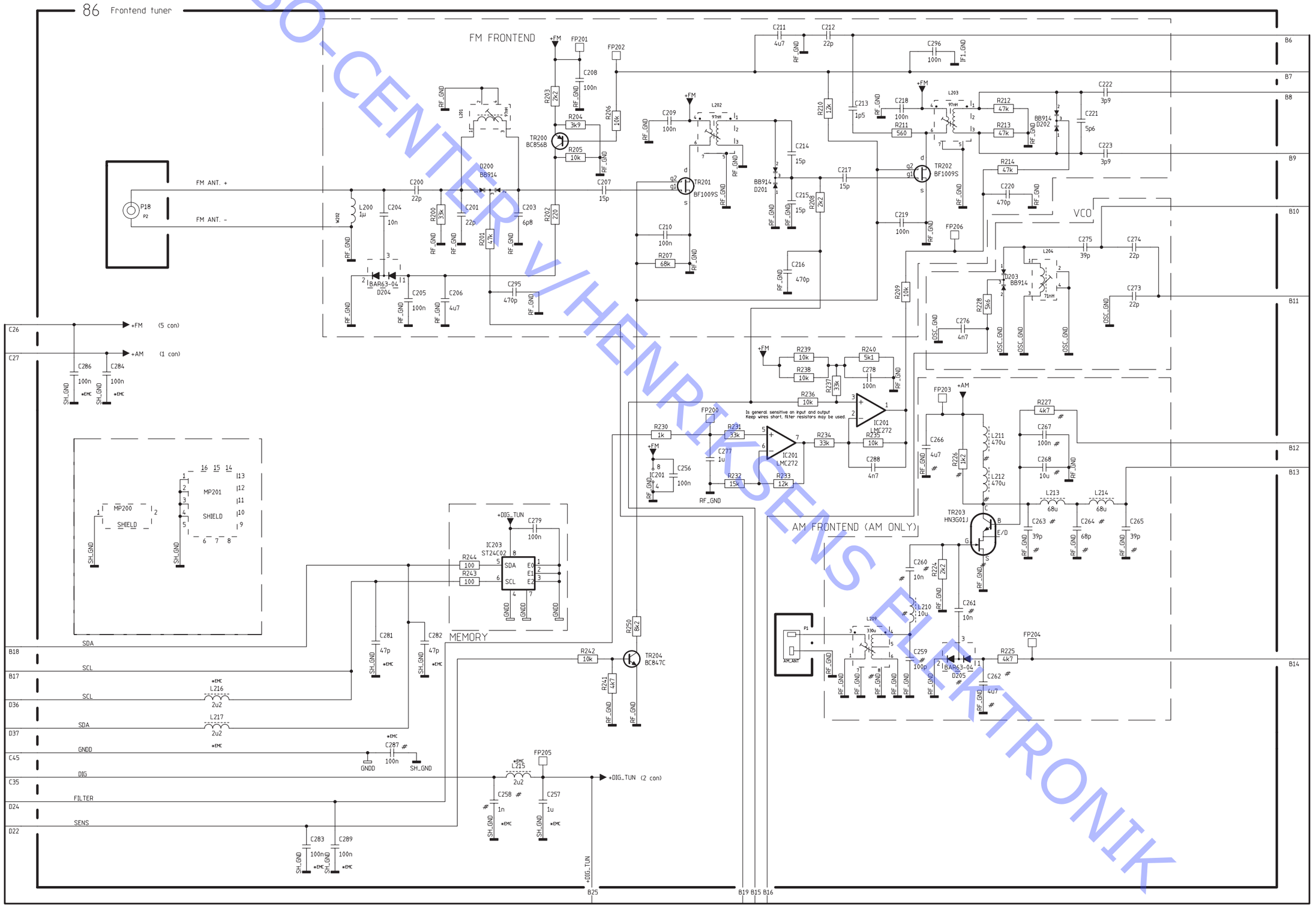

Diagram B – FM/AM Detector PCB drawing for PCB86 see page 2.13

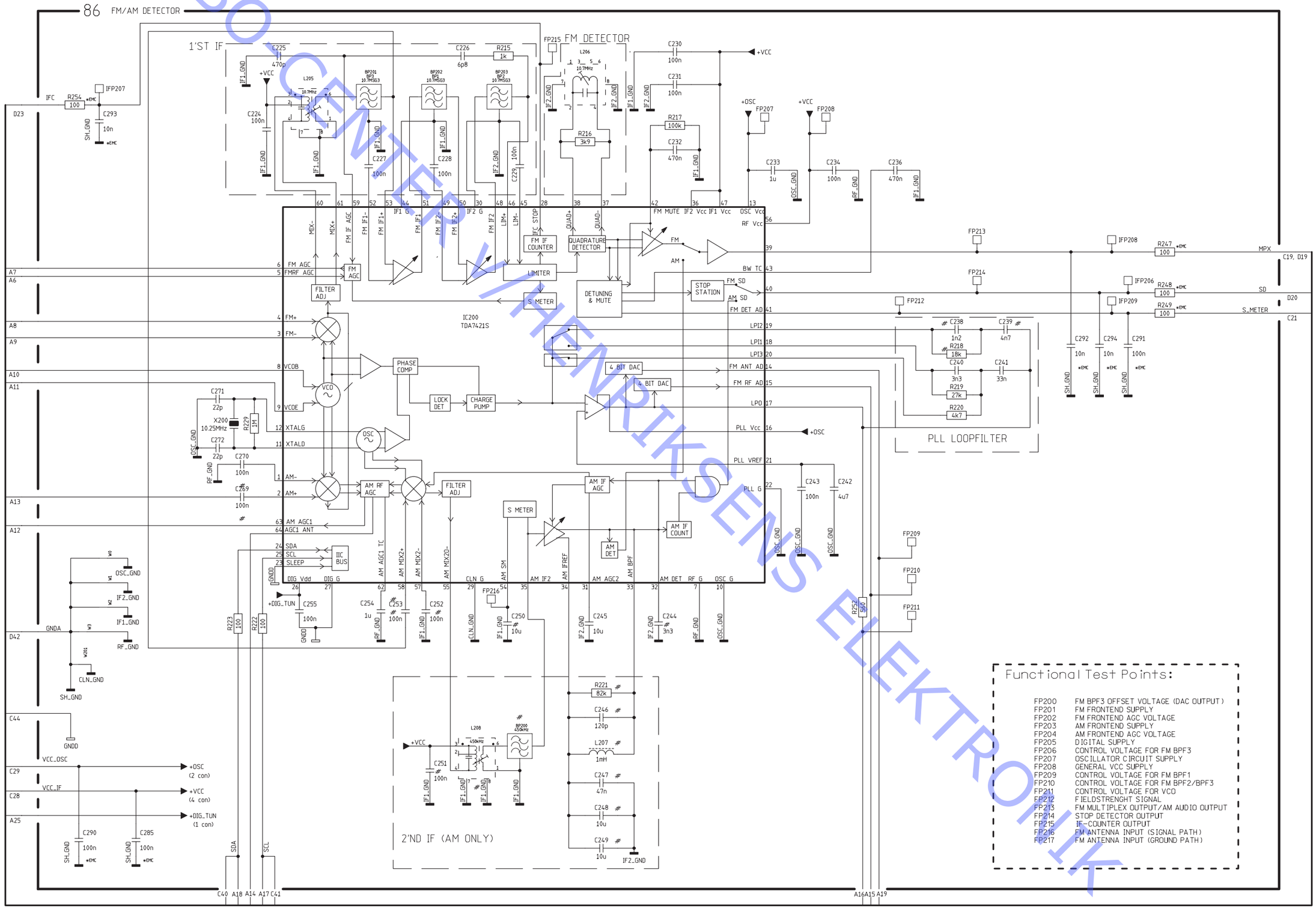

ABO CENTER VIHENRIKSENS ELEKTRONIK

Diagram C – Stereo decoder and power section PCB drawing for PCB86 see page 2.13

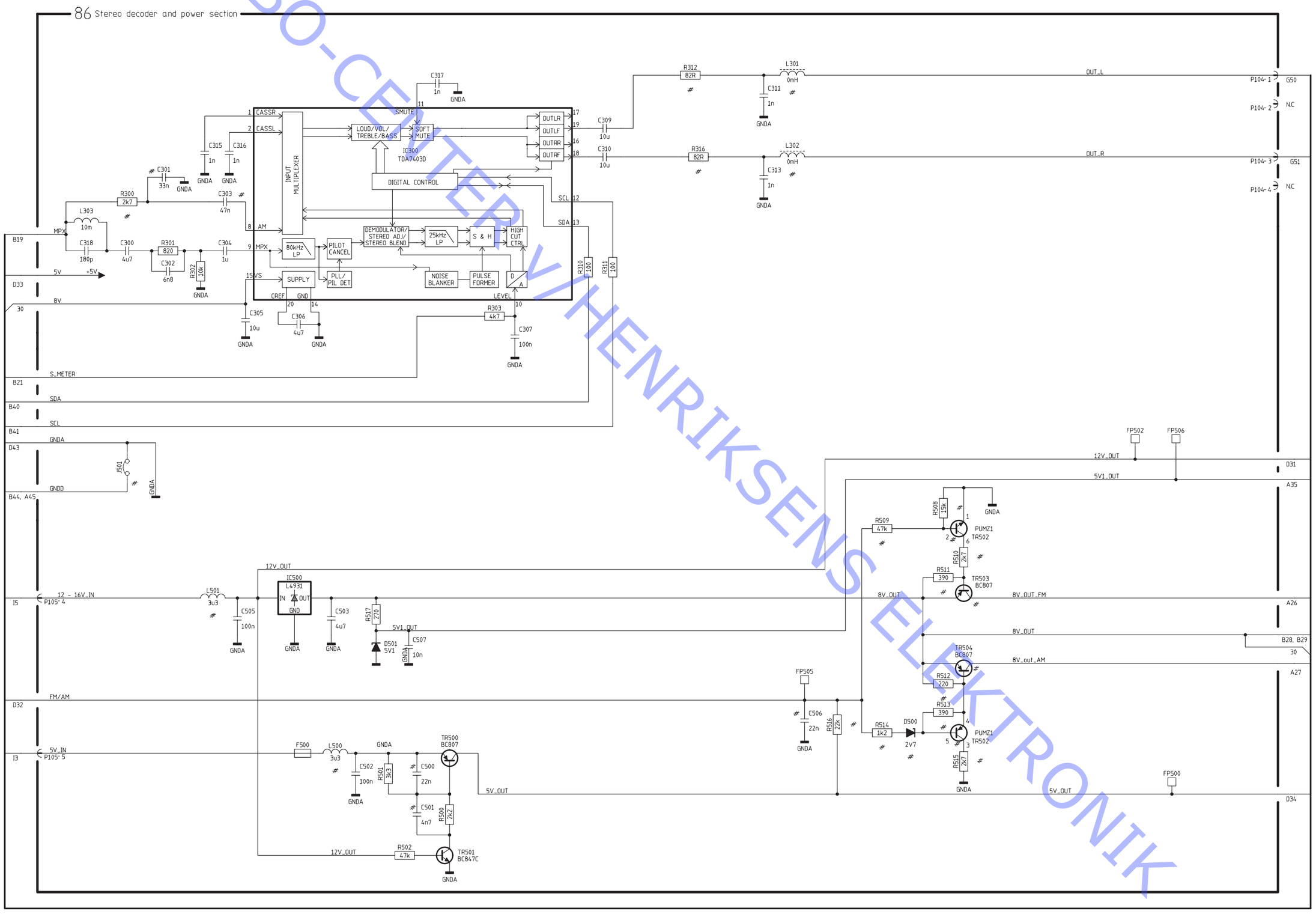

ABO-CENTER V/HENRIKSENS ELEKTRONIK

Diagram D – RDS, µP & IIC bus filter PCB drawing for PCB86 see page 2.13

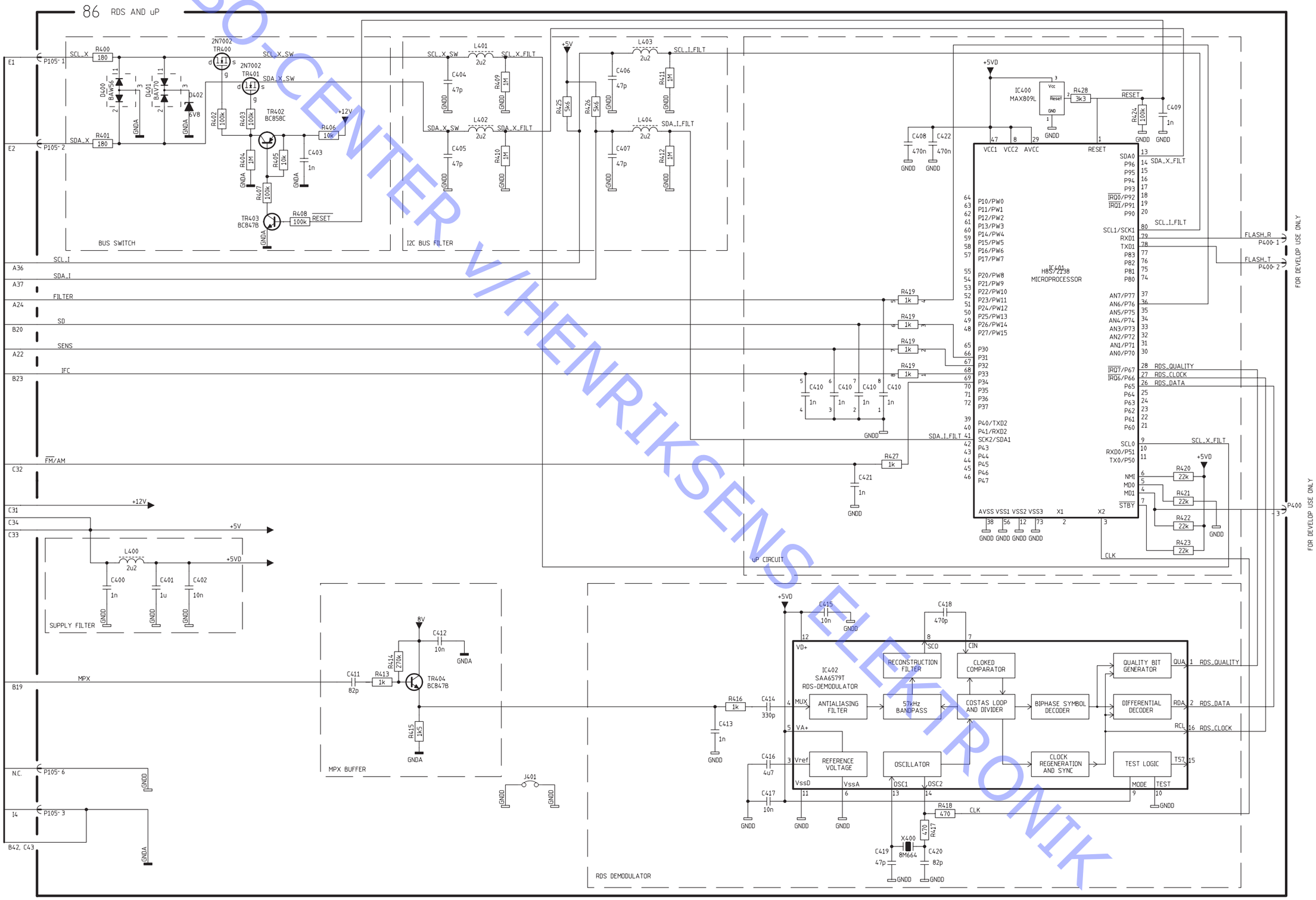

ABO-CENTER V/HENRIKSENS ELEKTRONIK

PCB86, Tuner-FM/AM-RDS-Stereo decoder

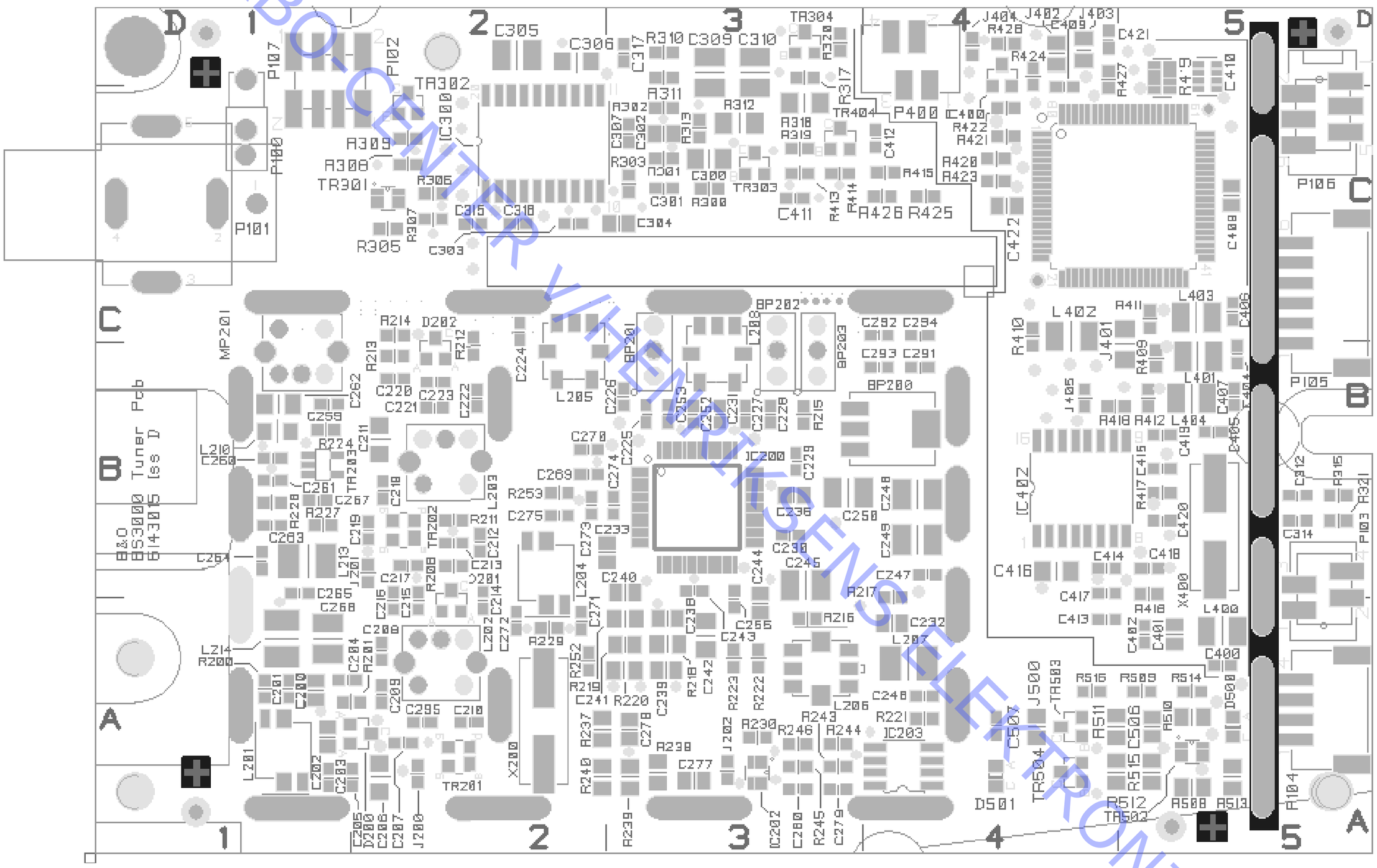
Tuner Pcb
B&O
BS3000
6143015
(ss D)
P107
P102
P100
P101
TR302
TR301
P400
P106
P105
P103
P104
TR304
TR404
TR303
TR503
TR504
TR501
TR201
TR202
IC200
IC203
D501
D202
D200
D500
MP201
BP202
BP201
BP203
BP200
X200
X400
J400
J402
J403
J404
J401
J405
J500
J200
J202
C305
C306
C317
C309
C310
C300
C301
C303
C304
C307
C302
C313
C312
C315
C316
C411
C412
C422
C421
C410
C409
C408
C407
C406
C405
C404
C403
C402
C401
C400
C414
C415
C416
C417
C418
C419
C420
C413
C314
C292
C294
C293
C291
C226
C253
C252
C231
C227
C228
C225
C270
C269
C274
C229
C236
C250
C248
C249
C247
C246
C245
C244
C240
C233
C273
C271
C238
C265
C243
C232
C207
C206
C239
C242
C241
C278
C277
C279
C280
C202
C205
C200
C201
C204
C208
C209
C295
C210
C211
C262
C259
C260
C261
C263
C264
C265
C268
C267
C219
C218
C217
C216
C215
C214
C213
C212
C203
C222
C223
C220
C221
C224
C262
C208
C272
C252
C254
C255
C256
C257
C258
C259
C260
C261
C262
C263
C264
C265
C266
C267
C268
C269
C270
C271
C272
C273
C274
C275
C276
C277
C278
C279
C280
C281
C282
C283
C284
C285
C286
C287
C288
C289
C290
C291
C292
C293

Diagram E – Interface for µP & µPH8 PCB drawing for PCB2 see page 2.16

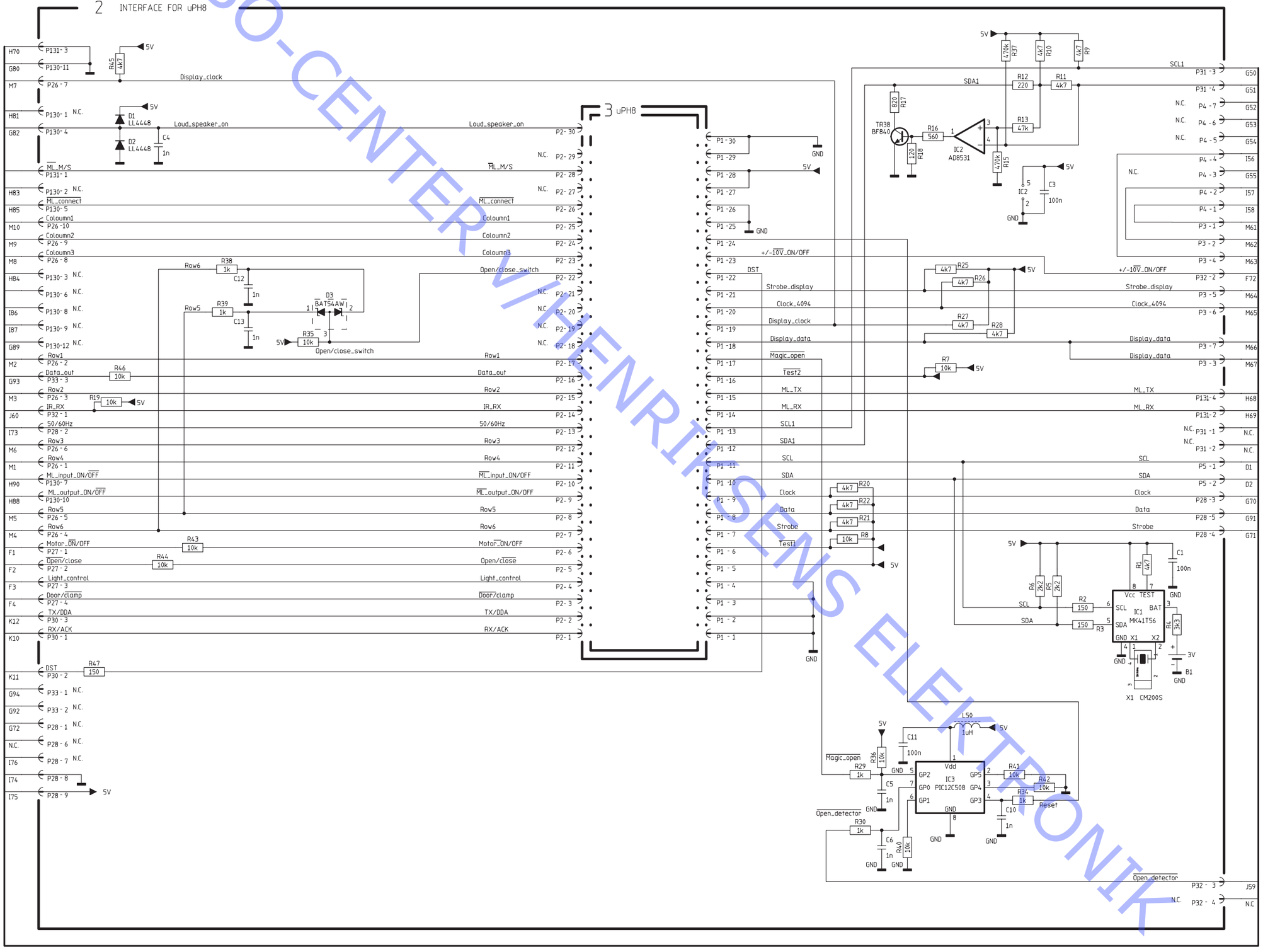

ABO-CENTER V/HENRIKSENS ELEKTRONIK

Diagram F – Light and Motor control, Light supply & IR PCB drawing for PCB9 see page 2.16

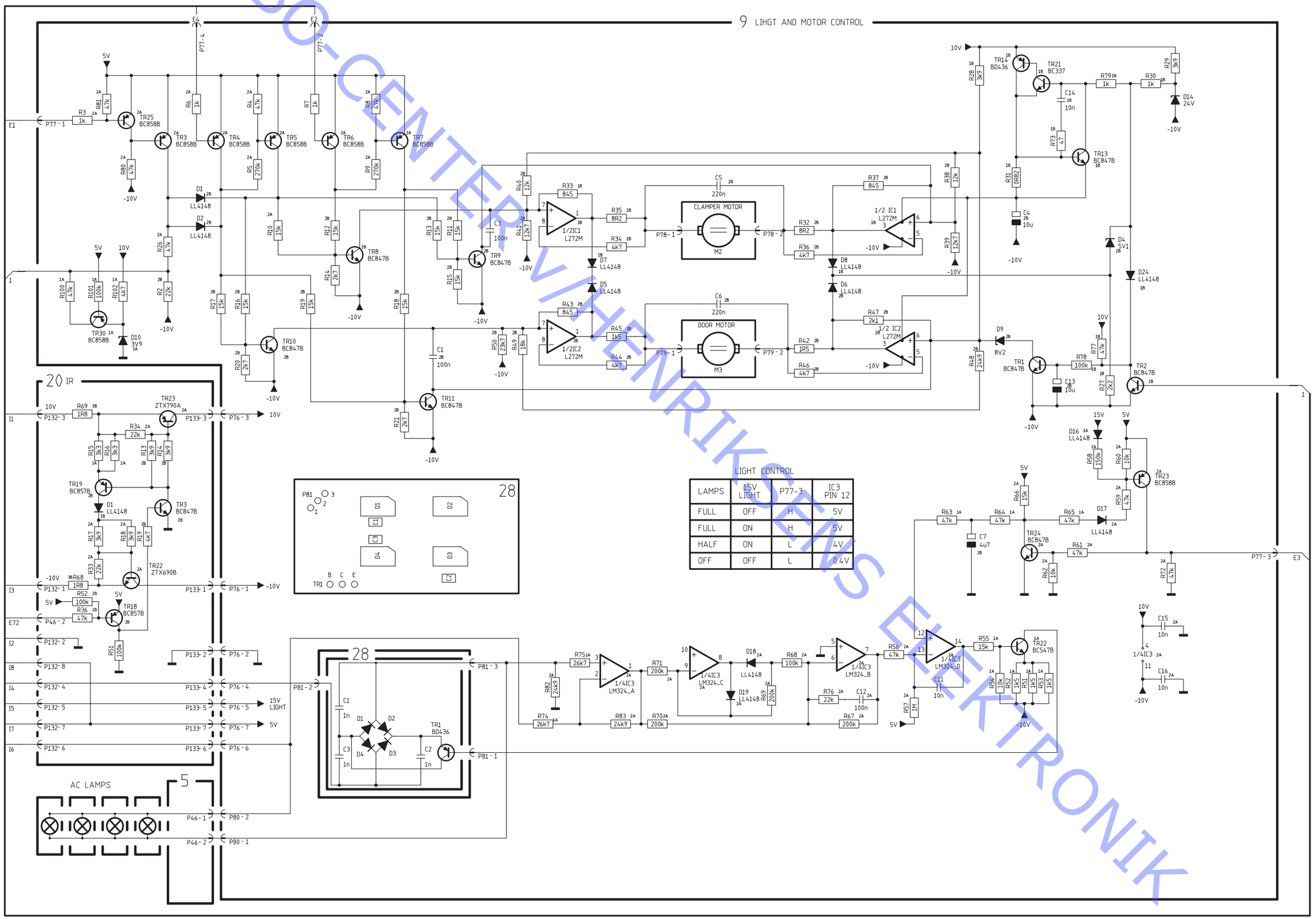

ABO-CENTER VIKENRIKSENS ELEKTRONIK

ABC-CENTER VIHENRIKSENS ELEKTRONIK

PCB9, Light and motor control

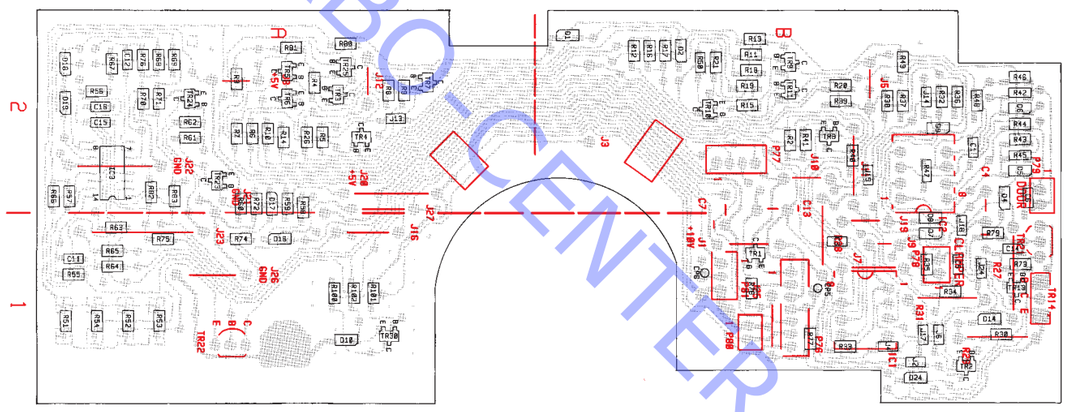

PCB2, Interface f/µPH8

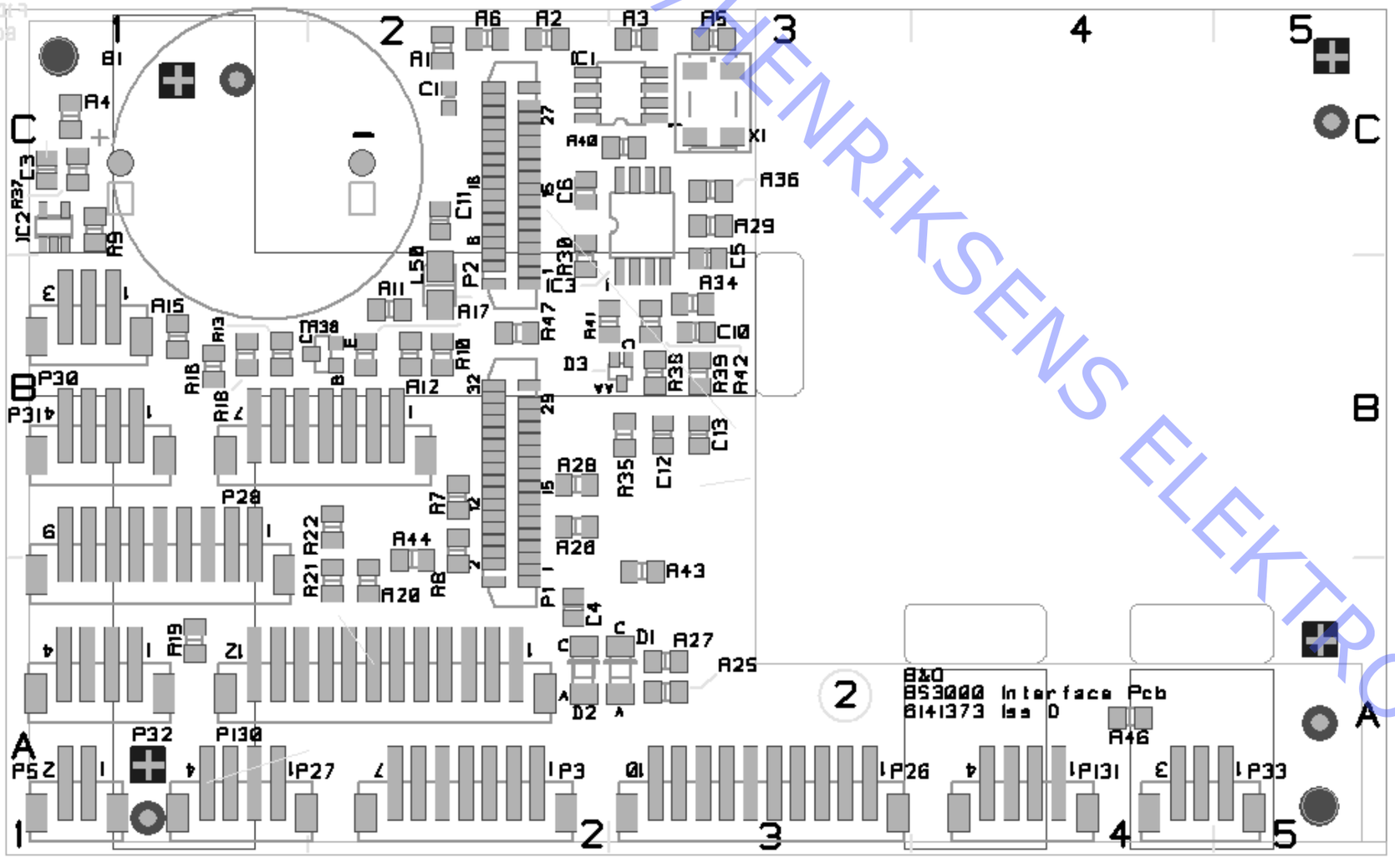

Diagram G – Input select PCB drawings for PCB12 see page 2.20

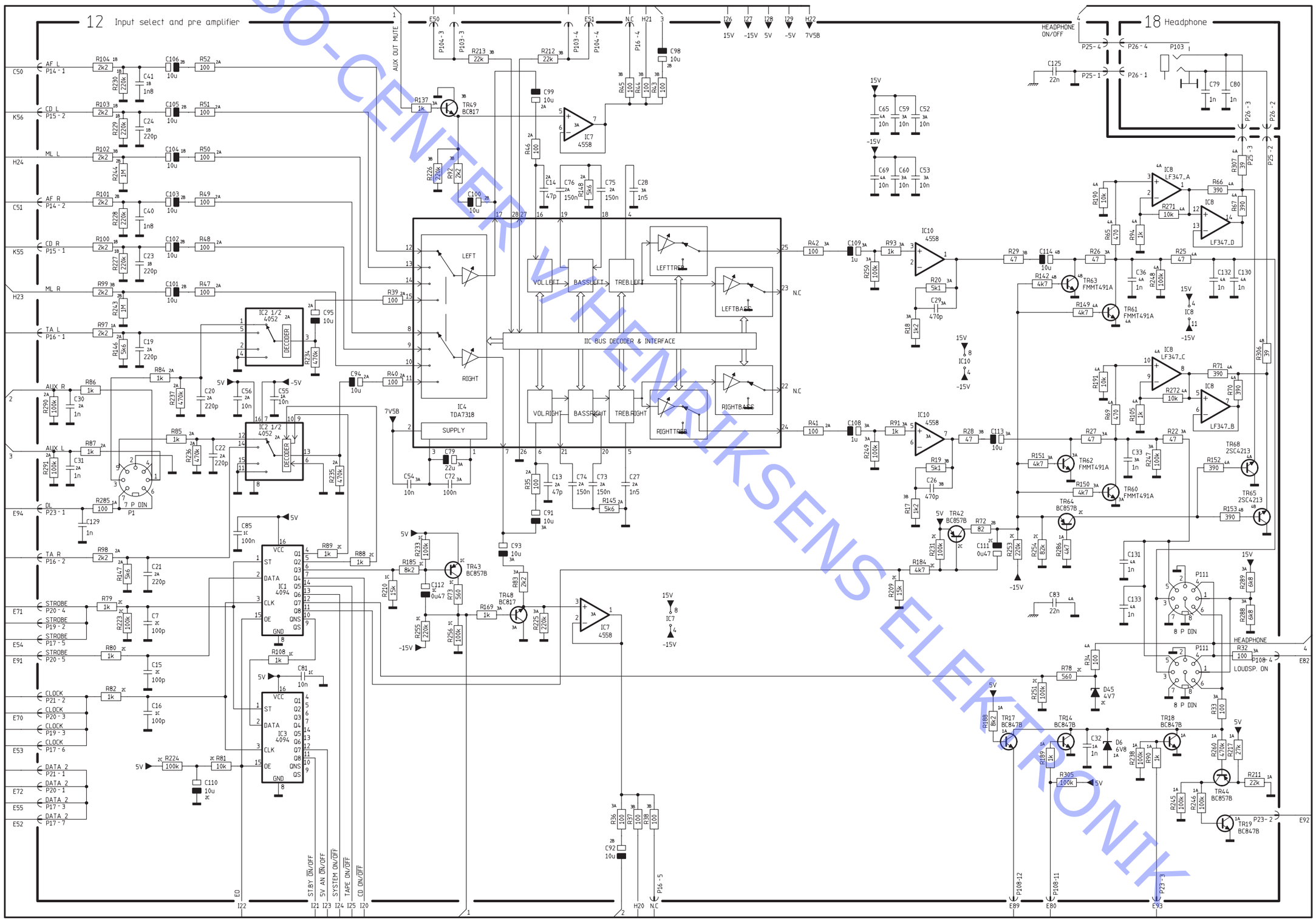

ABO-CENTER VIKSENS ELEKTRONIK

Diagram H – Master Link Interface PCB drawings for PCB12 see page 2.20

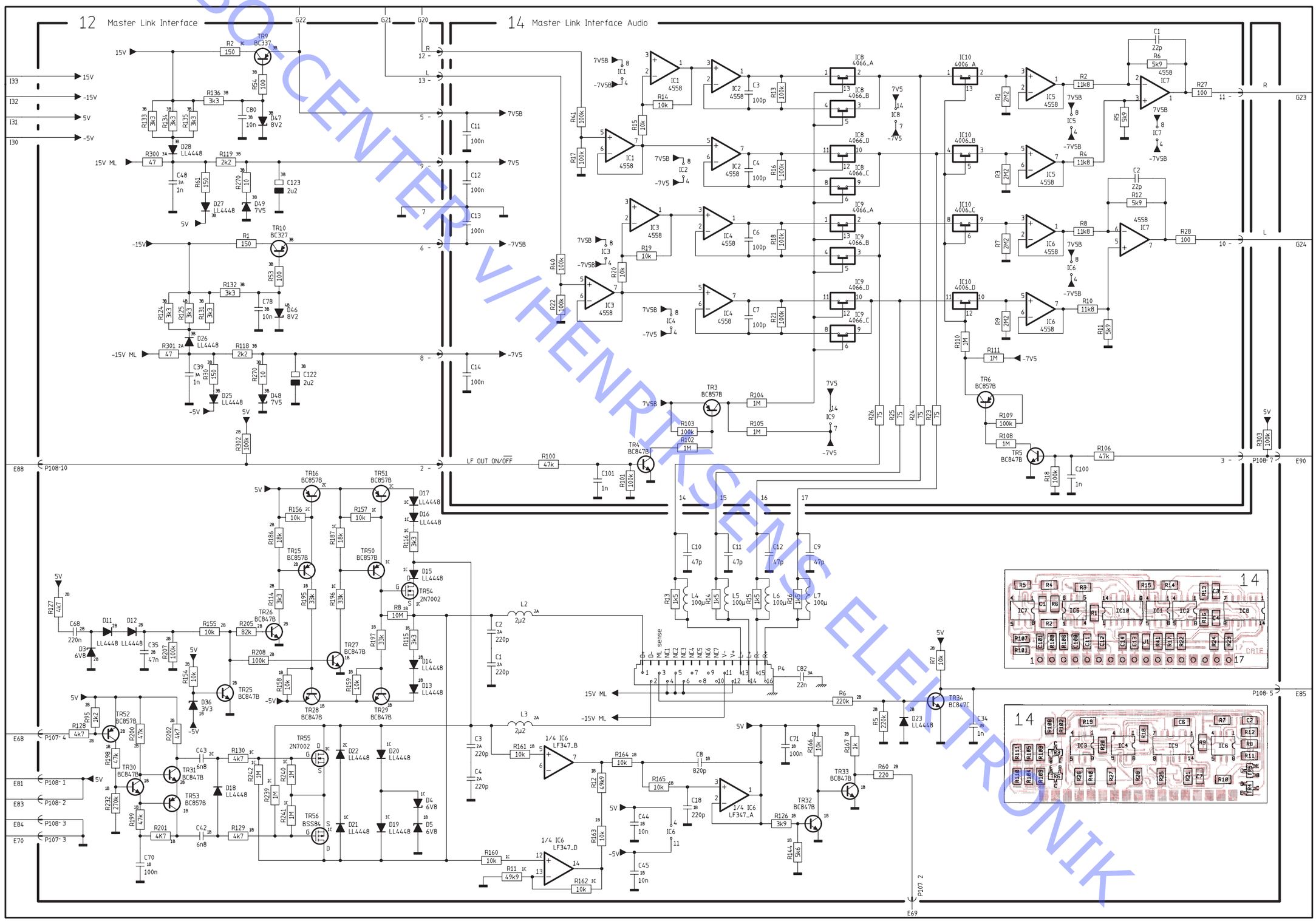
12 Master Link Interface
14 Master Link Interface Audio
G22
G21
G20
15V
-15V
5V
-5V
15V ML
-15V ML
7V5B
-7V5
LF OUT ON/OFF
E88
P108-10
E90
P108-7
E85
P108-5
E69
P107-2
E68
P107-4
E81
P108-1
E83
P108-2
E84
P108-3
E70
P107-3
TR9 BC337
TR10 BC327
TR16 BC857B
TR51 BC857B
TR15 BC857B
TR50 BC857B
TR26 BC847B
TR27 BC847B
TR25 BC847B
TR28 BC847B
TR29 BC847B
TR52 BC857B
TR30 BC847B
TR31 BC847B
TR53 BC857B
TR55 2N7002
TR56 BSS84
TR54 2N7002
TR3 BC857B
TR4 BC847B
TR6 BC857B
TR5 BC847B
TR32 BC847B
TR33 BC847B
TR34 BC847C
IC1 4558
IC2 4558
IC3 4558
IC4 4558
IC5 4558
IC6 4558
IC7 4558
IC8 4066_A
IC8 4066_B
IC8 4066_C
IC8 4066_D
IC9 4066_A
IC9 4066_B
IC9 4066_C
IC9 4066_D
IC10 4066_A
IC10 4066_B
IC10 4066_C
IC10 4066_D
1/4 IC6 LF347_B
1/4 IC6 LF347_D
1/4 IC6 LF347_A
D11 LL4448
D12 LL4448
D3 6V8
D36 3V3
D4 6V8
D5 6V8
D15 LL4448
D16 LL4448
D17 LL4448
D18 LL4448
D19 LL4448
D20 LL4448
D21 LL4448
D22 LL4448
D23 LL4448
D25 LL4448
D26 LL4448
D27 LL4448
D28 LL4448
D46 8V2
D47 8V2
D48 7V5
D49 7V5
D13 LL4448
D14 LL4448
P4
C82 22n
L2 2µ2
L3 2µ2
L4 100µ
L5 100µ
L6 100µ
L7 100µ
LF OUT ON/OFF
R100 47k
R101 100k
R102 1M
R103 100k
R104 1M
R105 1M
R106 47k
R108 1M
R109 100k
R110 1M
R111 1M
R126 3k9
R144 5k6
R160 10k
R161 10k
R162 10k
R163 10k
R164 10k
R165 10k
R166 10k
R167 1k
R60 220
R6 220k
R5 220k
R7 10k
R303 100k
R302 100k
R301 47
R300 47
R1 150
R2 150
R54 100
R53 100
R136 3k3
R132 3k3
R133 3k3
R134 3k3
R135 3k3
R124 3k3
R125 3k3
R131 3k3
R119 2k2
R118 2k2
R270 10
R61 150
R130 4k7
R129 4k7
R201 4K7
R202 4k7
R127 4k7
R128 4k7
R155 10k
R205 82k
R208 100k
R154 10k
R156 10k
R157 10k
R158 10k
R159 10k
R186 18k
R187 18k
R114 3k3
R195 33k
R196 33k
R197 33k
R115 3k3
R116 3k3
R198 47k
R199 47k
R200 47k
R232 270k
R242 1M
R240 1M
R239 1M
R241 1M
R12 49k9
R11 49k9
R13 100k
R14 10k
R15 10k
R16 100k
R17 100k
R18 100k
R19 10k
R20 10k
R21 100k
R22 100k
R41 100k
R40 100k
R207 100k
R302 100k
C48 1n
C39 1n
C80 10n
C78 10n
C123 2u2
C122 2u2
C68 220n
C35 47n
C70 100n
C43 6n8
C42 6n8
C1 220p
C2 220p
C3 220p
C4 220p
C10 47p
C11 47p
C12 47p
C9 47p
C3 100p
C4 100p
C6 100p
C7 100p
C18 220p
C8 820p
C44 10n
C45 10n
C71 100n
C34 1n
C101 1n
C100 1n
C11 100n
C12 100n
C13 100n
C14 100n
C1 22p
C2 22p
R6 5k9
R12 5k9
R1 2M2
R2 2M2
R3 2M2
R4 2M2
R7 2M2
R9 2M2
R5 5k9
R11 5k9
R2 11k8
R4 11k8
R8 11k8
R10 11k8
R27 100
R28 100
R303 100k
R302 100k
R26 75
R25 75
R24 75
R23 75
R18 100k
R101 100k
R109 100k
R108 1M
R106 47k
R100 47k
R60 220
R6 220k
R5 220k
R7 10k
R303 100k
R302 100k
P4
C82 22n
L2 2µ2
L3 2µ2
L4 100µ
L5 100µ
L6 100µ
L7 100µ
C1 22p
C2 22p
R6 5k9
R12 5k9

Diagram I – Power Supply & Transformer PCB drawings for PCB12 see page 2.20 PCB drawing for PCB15 see page 2.22

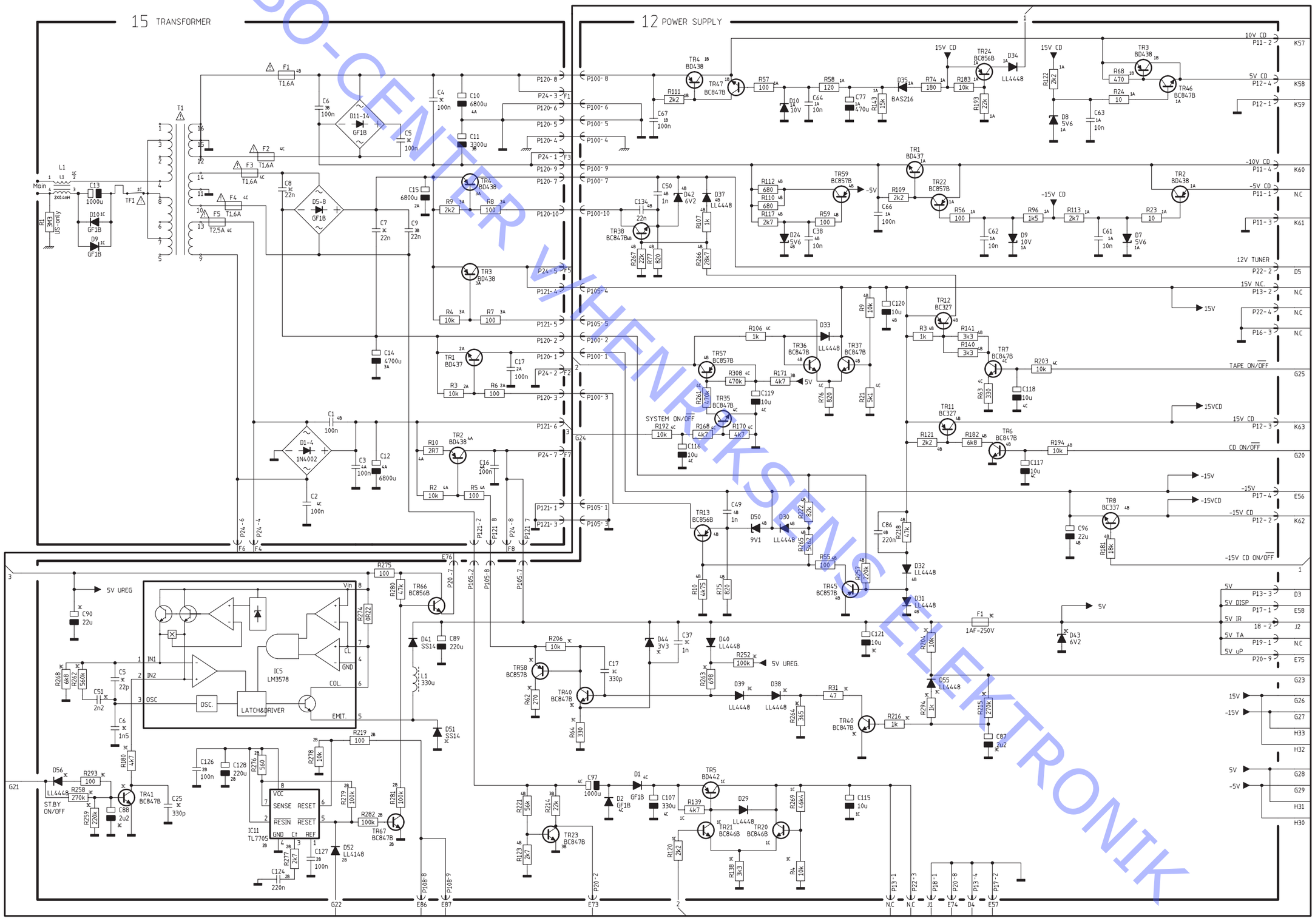

ABO-CENTER VIKERSUND ELEKTRONIK

2.20 PCB drawings 2.20

PCB12, Power Supply, Input select & Pre-amplifier

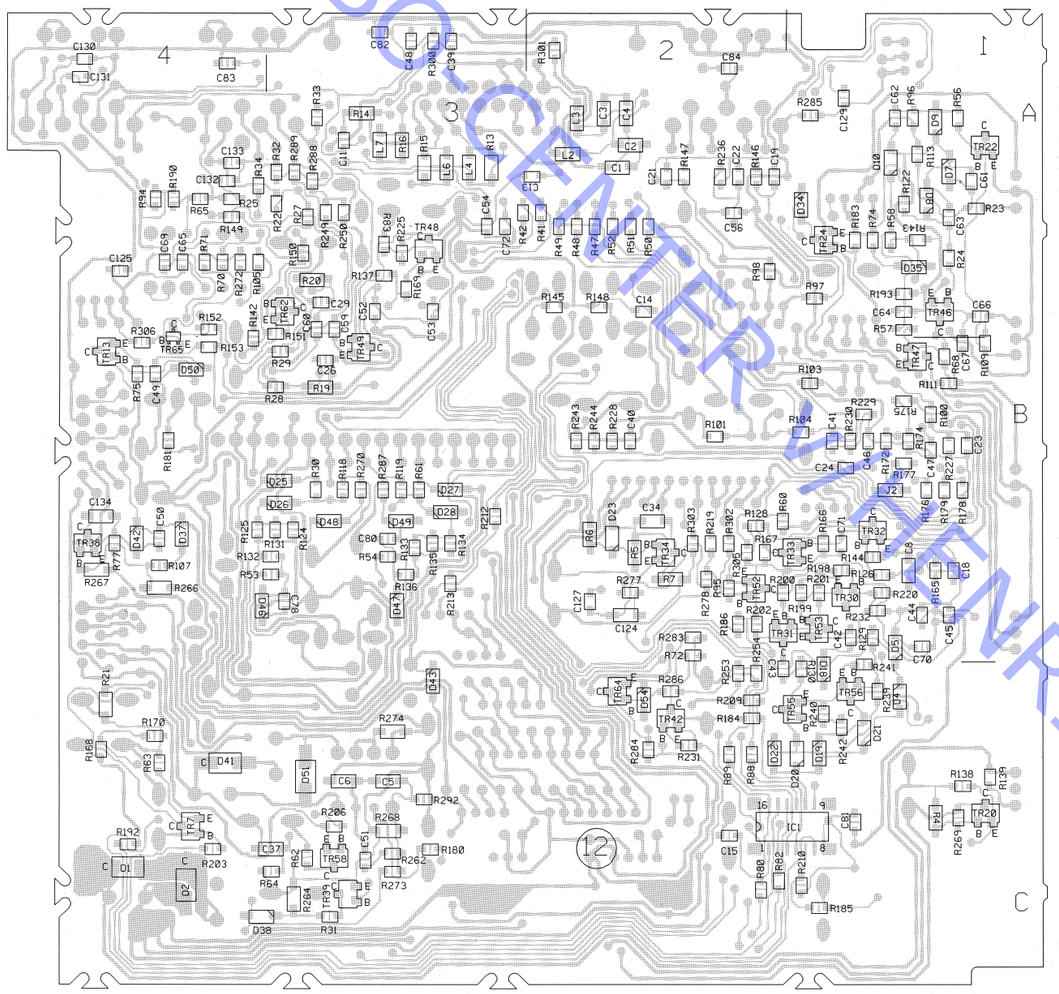

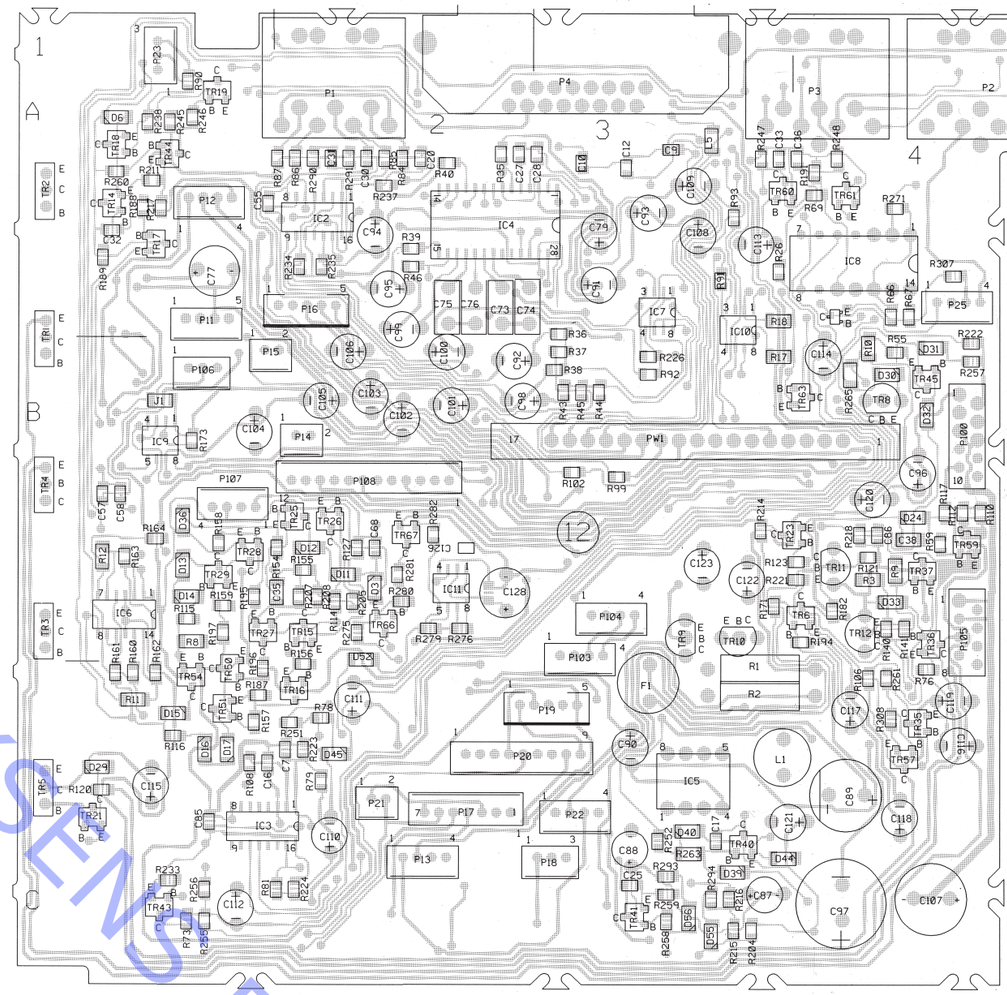

ABC-CENTER VITENRIKSENS ELEKTRONIK

Diagram J – Door sensor PCB drawings for PCB20 & PCB21 see page 2.22

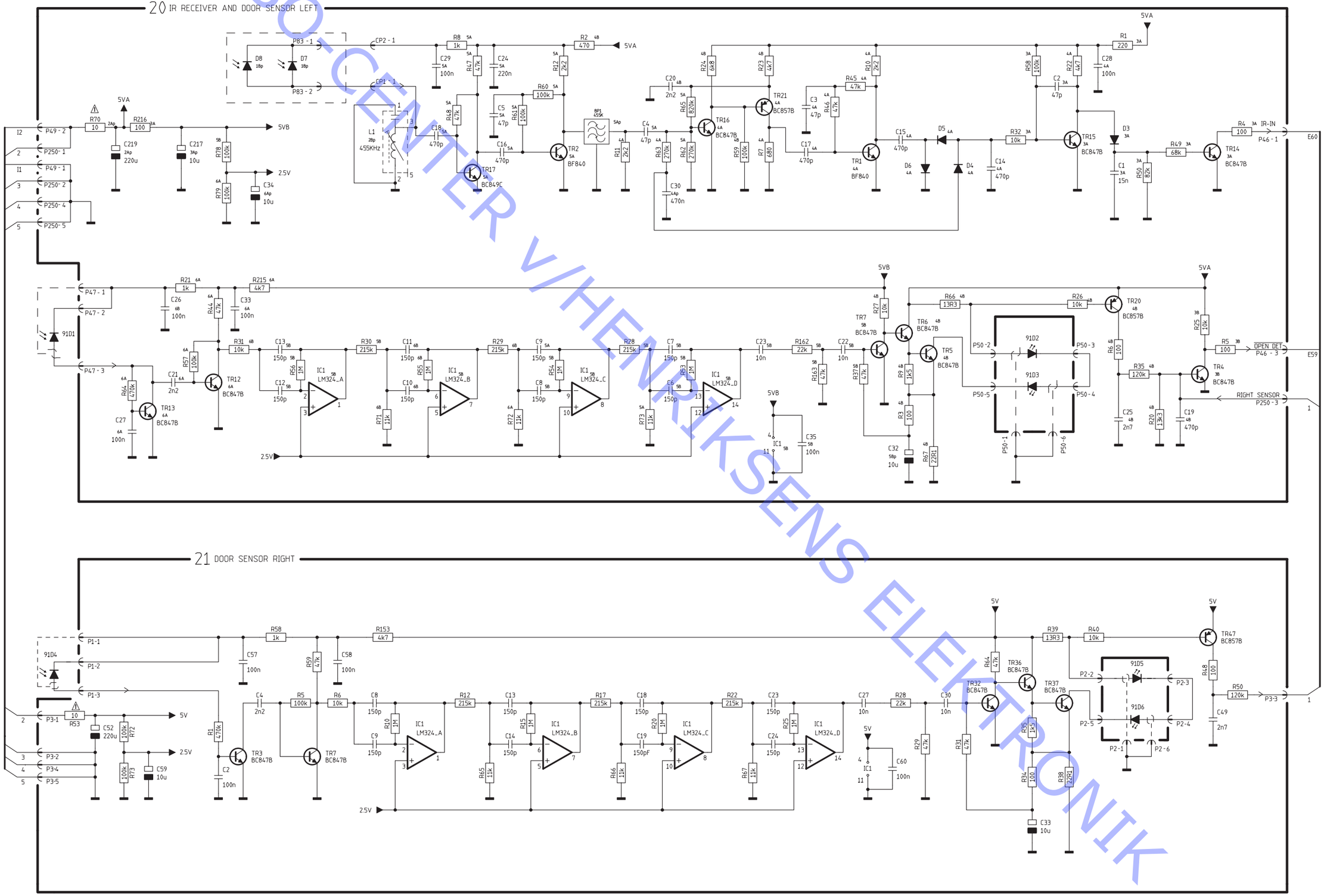

ABO-CENTER V/HENRIKSENS ELEKTRONIK

ABONNEMENT VIENRIKSENS ELEKTRONIK

PCB20, IR receiver and left door sensor

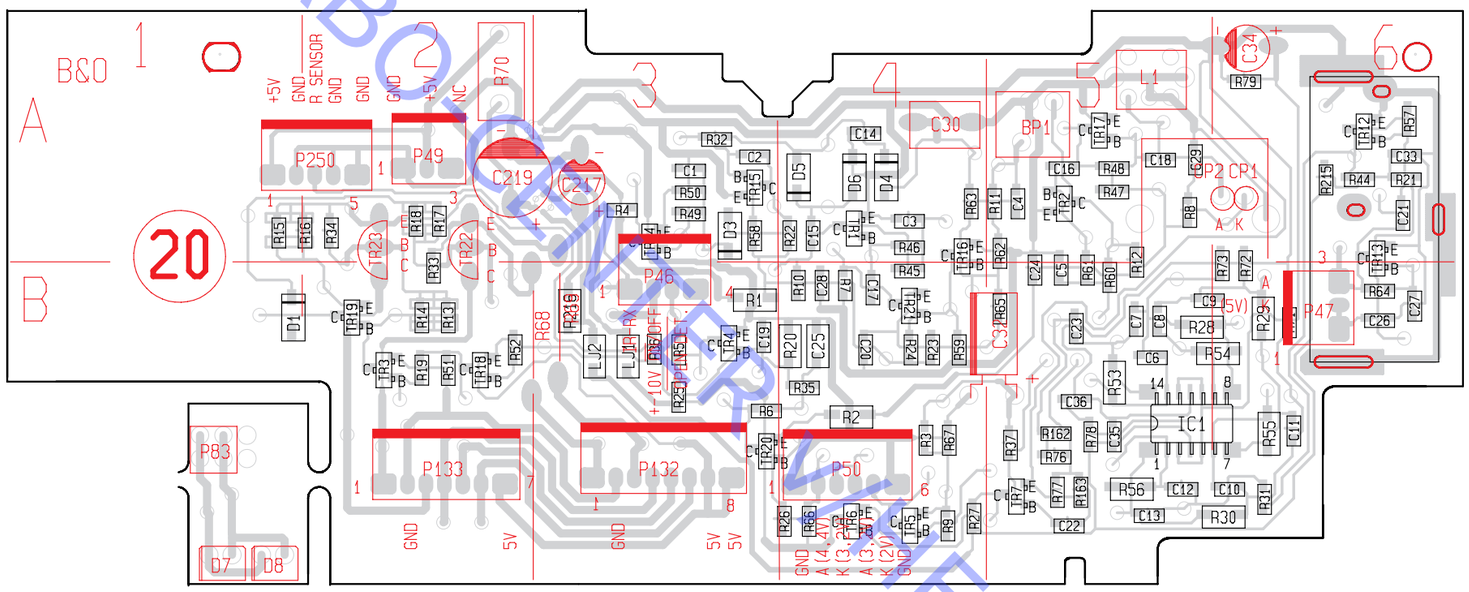

PCB21, Door sensor right MKII

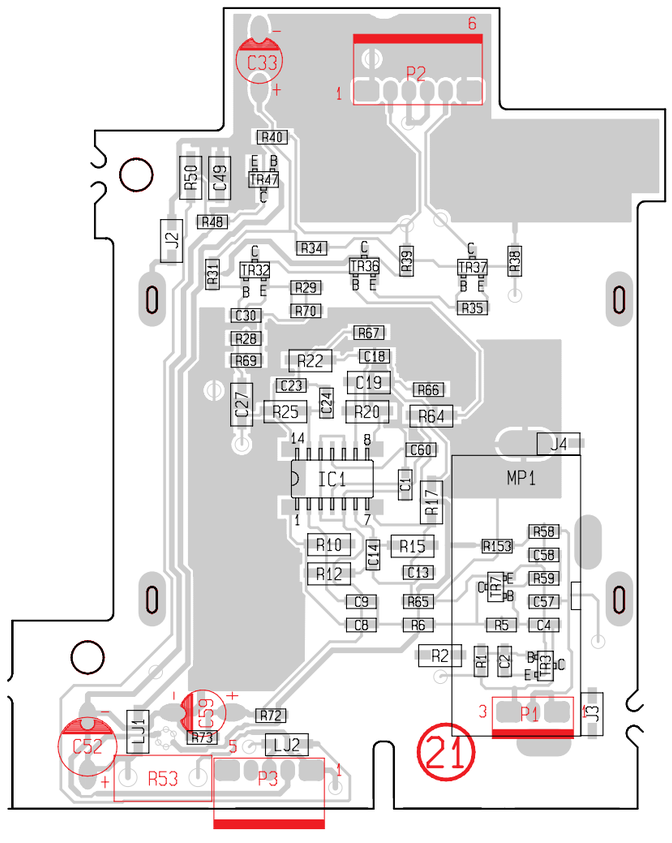

PCB15, Transformer

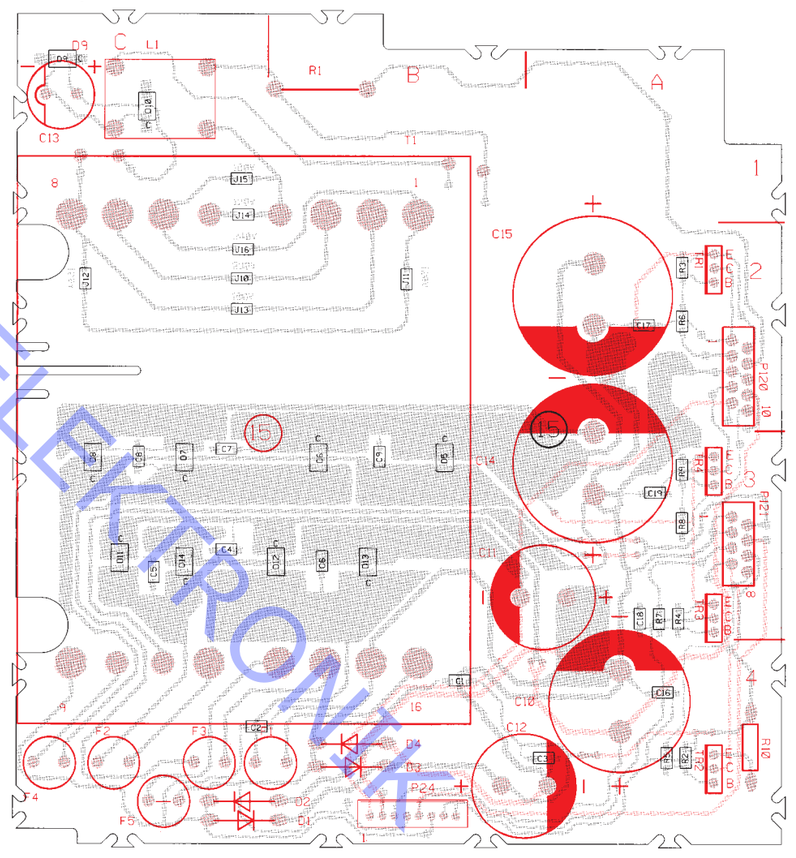

Diagram K – CD Interface

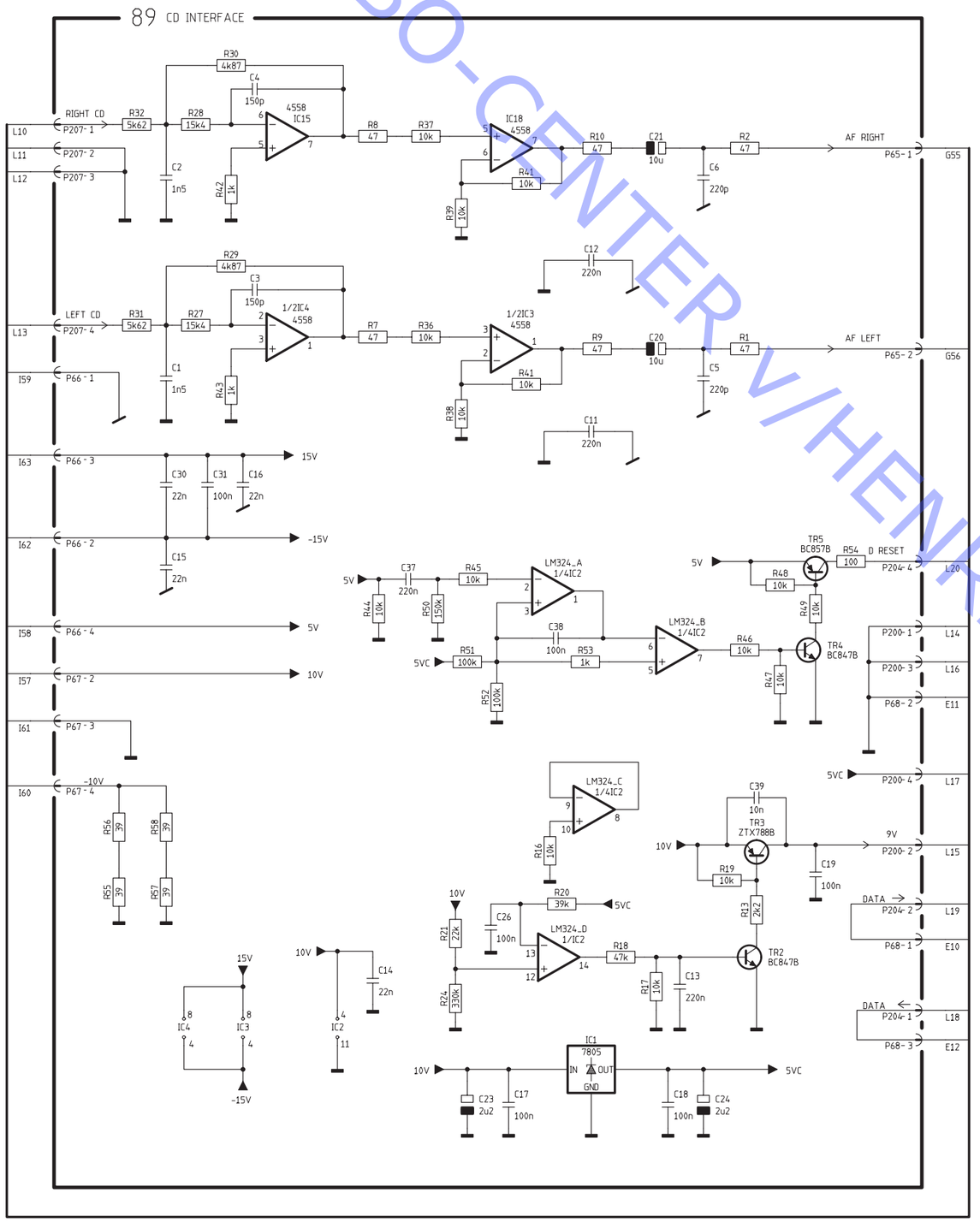

PCB5, Display

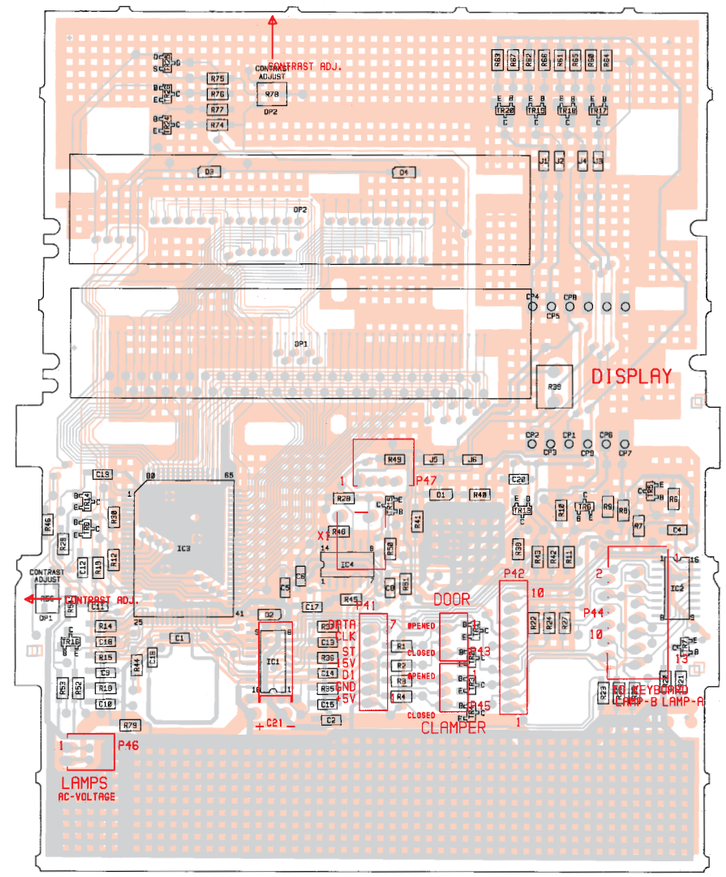

ABO-CENTER V/HENRIKSENS ELEKTRONIK

Diagram L – CD Servo & Decoder

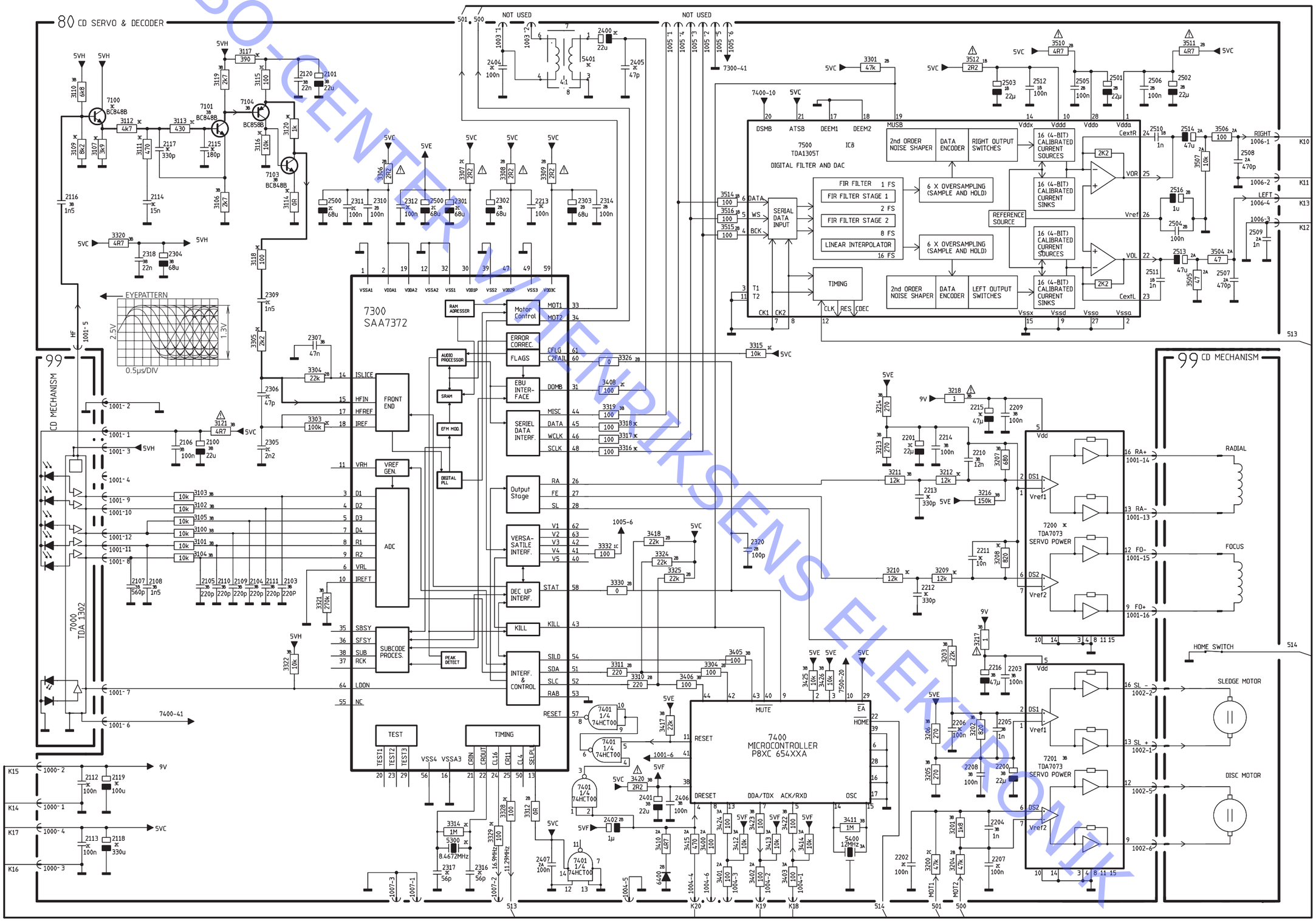

ABO-CENTER V/HENRIKSENS ELEKTRONIK

Diagram M – Display & Keyboard PCB drawing for PCB5 see page 2.23

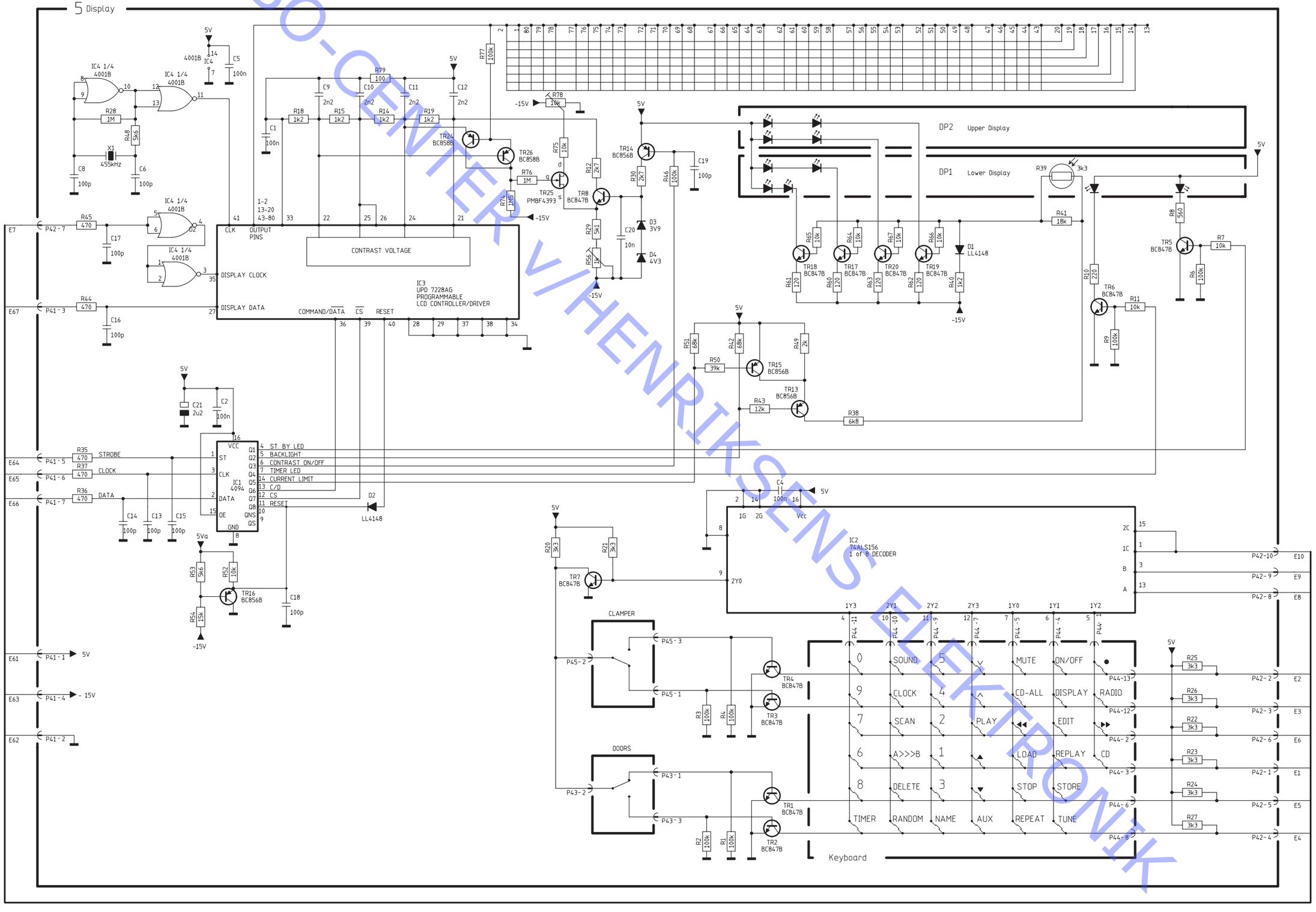

ABO-CENTER V/HENRIK SENS ELEKTRONIK

List of electrical parts

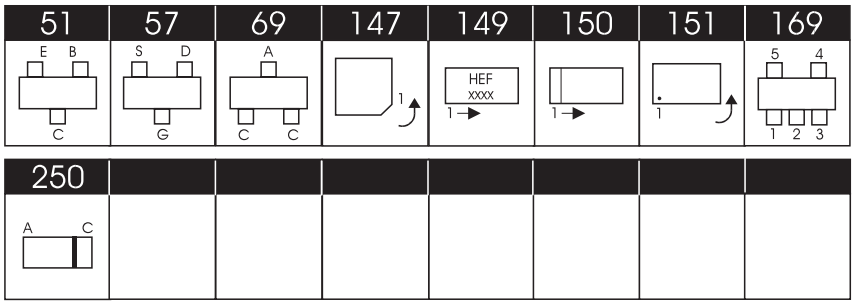

Resistors not referred to are standard, see page 3-9

PCB2, 8006796 Interface f/µPH8

IC1Δ	8342397	**149**	Memory/clock M141T56M6	IC2Δ IC3Δ	8343699 8343682	**169** **151**	AD 8531 PIC 12C508
TR38*	8320740	**51**	BF 840				
D1-D2	8300606	**250**	LL 4448				
D3	8301120	**69**	BAT 54AW				
C1	4011135		100nF -20+80% 16V	C10	4010237		1nF 10% 50V
C3	4010274		100nF -20+80% 25V	C11	4010316		100nF 10% 25V
C4-C6	4010237		1nF 10% 50V	C12-C13	4010237		1nF 10% 50V
L50	8021301		Coil 1µH 20%				
X1	8090230		Crystal 32.768KHz				
B1	8700027		Battery lithium 3V				
P1-P2	7221357		Socket 30 pole	P28	7221356		Plug 9 pole
				P30	7221330		Plug 3 pole
P3-P4	7221378		Socket 7 pole	P31-P32	7221329		Plug 4 pole
P5	7221272		Plug 2 pole	P33	7221330		Plug 3 pole
P26	7221359		Plug 10 pole	P130	7221361		Plug 12 pole
P27	7221329		Plug 4 pole	P131	7221329		Plug 4 pole

PCB3, 8006797 µPH8 Microcomputer

PCB5, 8001362 Display

IC1Δ	8341025	**150**	4094B	IC4Δ	8341226	**150**	4001B gate 4x2 input
IC2Δ	8343771	**147**	SN74ALS156				
IC3Δ	8341079	**151**	µPD 7228				
TR1-TR6	8320755	**51**	BC 847B	TR17-TR20	8320936	**51**	BC 847C
TR8	8320755	**51**	BC 847B	TR24	8320811	**51**	BC 857B
TR13-TR16	8320753	**51**	BC 856B	TR25	8320955	**57**	PMBF 4393
				TR26	8320811	**51**	BC 857B
D1-D2	8300482	**250**	LL 4148	D3	8300577	**250**	Z3.9V 2% 0.5W
				D4	8300661	**250**	Z4.3V 2% 0.5W
DP1	8330259		Display, lower				
DP2	8330468		Display, upper				
R14-R15	5011912		1.2KΩ 1% 1/8W	R39	5210006		LDR 3.3KΩ 33%
				R40	5011912		1.2KΩ 1% 1/8W
R18-R19	5011912		1.2KΩ 1% 1/8W	R49	5012069		2KΩ 1% 1/8W
				R56	5370435		1KΩ
R29	5011914		5.1KΩ 1% 1/8W	R78	5370400		10KΩ

Δ indicates that static electricity may destroy the component

** specially selected or adapted sample*

ABO-CENTER V/HENRIKSENS ELEKTRONIK

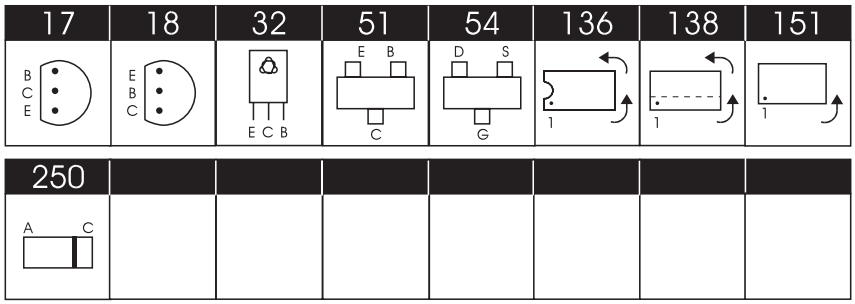

Resistors not referred to are standard, see page 3-9

C1-C2	4010166	100nF -20+80% 50V	C9-C12	4010170	2.2nF 10% 50V
C4-C5	4010166	100nF -20+80% 50V	C13-C19	4000241	100pF 5% 50V
C6	4000241	100pF 5% 50V	C20	4010157	10nF 10% 50V
C8	4000241	100pF 5% 50V	C21	4200517	2.2µF 20% 50V
X1	8030221	Crystal 455KHz			
P41	7220714	Plug 7 pole	P44	7210853	Socket 13 pole
P42	7220717	Plug 10 pole	P45	7220710	Plug 3 pole
P43	7220710	Plug 3 pole	P46	7220724	Plug 2 pole

PCB9, 8001550 Light and motor control

IC1Δ-IC2Δ	8341420	**136**	TCA0372	IC3Δ	8341041	**138**	LM 324
TR1-TR2	8320755	**51**	BC 847B	TR14	8320425	**32**	BD 436
				TR21	8320507	**18**	BC 337-25
TR3-TR7	8320811	**51**	BC 857B	TR22	8320497	**18**	BC 547B
				TR23	8320811	**51**	BC 857B
TR8-TR11	8320755	**51**	BC 847B	TR24	8320755	**51**	BC 847B
				TR25	8320811	**51**	BC 857B
TR13	8320755	**51**	BC 847B	TR30	8320811	**51**	BC 857B
D1-D2	8300482	**250**	LL 4148	D10	8300577	**250**	Z3.9V 2% 0.5W
				D14	8300772	**250**	Z24V 5% 0.4W
D4	8300774	**250**	Z5.1V 5% 0.5W	D16-D19	8300482	**250**	LL 4148
D5-D8	8300482	**250**	LL 4148				
				D24	8300482	**250**	LL 4148
D9	8300723	**250**	Z8.2V 2% 0.5W				

R27	5010064	2.2KΩ 5% 1/4W	R47	5011854 2.1KΩ 1% 1/4W
R28	5010069	3.9KΩ 5% 1/4W	R48	5011598 24.9KΩ 1% 1/8W
R29	5010700	3.9KΩ 5% 1/2W	R49	5011838 18KΩ 1% 1/8W
R31	5011378	0.82Ω 5% 1/4W	R50	5011760 23.7KΩ 1% 1/8W
R32	5011845	8.2Ω1% 1/4W	R67	5011601 200KΩ 1% 1/8W
R33	5011834	845Ω 1% 1/8W	R68	5011600 100KΩ 1% 1/8W
R35	5011845	8.2Ω 1% 1/4W	R69-R71	5011601 200KΩ 1% 1/8W
R37	5011834	845Ω 1% 1/8W		
R38	5011527	12KΩ 1% 1/8W	R74-R75	5011595 26.7KΩ 1% 1/8W
R39	5011752	12.7KΩ 1% 1/8W		
R40	5011527	12KΩ 1% 1/8W	R78	5011600 100KΩ 1% 1/8W
R41	5011752	12.7KΩ 1% 1/8W	R82-R83	5011598 24.9KΩ 1% 1/8W
R42	5021151	1.5Ω 1% 1/4W		
R43	5011834	845Ω 1% 1/8W	R101	5011600 100KΩ 1% 1/8W
R45	5021151	1.5Ω 1% 1/4W		

C1	4010220	100nF 10% 50V	C12	4010166	100nF -20+80% 50V
C3	4010220	100nF 10% 50V	C13	4200524	10µF 20% 25V
C4	4200524	10µF 20% 25V	C14-C16	4010157	10nF 10%
C5-C6	4000287	220nF -20+80% 25V			
C7	4200515	4.7µF 20% 25V			
C11	4010157	10nF 10%			

Δ indicates that static electricity may destroy the component

ABO-CENTER W/HENRIKSENS ELEKTRONIK

P76	7220714	Plug 7 pole	
P77	7220711	Plug 4 pole	
P78-P80	7220709	Plug 2 pole	
P81	7220710	Plug 3 pole	

PCB12, 8001833 Power Supply, Input select & Pre-amplifier

IC1Δ	8341025	151	4094B	IC6Δ	8341231	151	LF 347
IC2Δ	8341059	151	4052	IC7Δ	8341022	151	4558
IC3Δ	8341025	151	4094B	IC8Δ	8340205	151	LF 347-TL074
IC4Δ	8342238	151	TDA 7318D	IC10Δ	8341022	151	4558
IC5Δ	8341225	151	LM 3578	IC11Δ	8341747	151	TL 7705BCD

TR1	8320427	32	BD 437	TR34	8320936	51	BC 847C
TR2-TR4	8320428	32	BD 438	TR35-TR41	8320755	51	BC 847B
TR5	8320443	32	BD 442	TR42-TR45	8320811	51	BC 857B
TR6-TR7	8320755	51	BC 847B	TR46-TR47	8320755	51	BC 847B
TR8-TR9	8320512	18	BC 337-25	TR48-TR49	8320759	51	BC 817-25B
TR10-TR12	8320523	17	BC 327-25	TR50-TR53	8320811	51	BC 857B
TR13	8320753	51	BC 856	TR54-TR55	8320856	54	2N7002
TR14	8320755	51	BC 847B	TR56	8320899	54	BSS 84P-50V
TR15-TR16	8320811	51	BC 857B	TR57-TR59	8320811	51	BC 857B
TR17-TR19	8320755	51	BC 847B	TR60-TR63	8321080	51	FMMT 491ATA
TR20-TR21	8320816	51	BC 846B	TR64	8320811	51	BC 857B
TR22	8320811	51	BC 857B	TR65	8320941	51	2SC 4213
TR23	8320755	51	BC 847B	TR66	8320753	51	BC 856B
TR24	8320753	51	BC 856B	TR67	8320755	51	BC 847B
TR25-TR33	8320755	51	BC 847B	TR68	8320941	51	2SC 4213

D1-D2	8300907	250	GF 1B	D41	8300914	250	SS 14
D3-D6	8300520	250	Z6.8V 5% 0.5W	D42-D43	8300644	250	Z6.2V 2% 0.5W
D7-D8	8300562	250	Z5.6V 2% 0.5W	D44	8300645	250	Z3.3V 2% 0.5W
D9-D10	8300605	250	Z10.0V 5% 0.5W	D45	8300677	250	Z4.7V 5% 0.5W
D11-D23	8300606	250	LL 4448	D46-D47	8300723	250	Z8.2V 2% 0.5W
D24	8300562	250	Z5.6V 2% 0.5W	D48-D49	8300726	250	Z7.5V 2% 0.5W
D25-D34	8300606	250	LL 4448	D50	8300762	250	Z9.1V 2% 0.5W
D35	8301045	250	BAS 216	D51	8300914	250	SS 14
D36	8300607	250	Z3.3V 5% 0.4W	D52	8300482	250	LL 4148
D37-D40	8300606	250	LL 4448	D55-D56	8300606	250	LL 4448

R4	5011557	10KΩ 1% 1/8W	R74	5011903	180Ω 1% 1/4W
R8	5011332	10MΩ 10% 1/8W	R263	5011982	698Ω 1% 1/8W
R9	5011557	10KΩ 1% 1/8W	R264	5011871	365Ω 1% 1/8W
R10	5011792	4.75KΩ 1% 1/8W	R265	5011984	5.62KΩ 1% 1/8W
R11-R12	5011599	49.9KΩ 1% 1/8W	R266	5011987	28.7KΩ 1% 1/8W
R13-R16	5011632	1.5KΩ 1% 1/4W	R267	5011988	22KΩ 1% 1/8W
R17-R18	5011912	1.2KΩ 1% 1/8W	R268	5012057	6.8KΩ 1% 1/8W
R19-R21	5011914	5.1KΩ 1% 1/8W	R269	5012317	46.4KΩ 1% 1/10W
			R271-R272	5012331	10KΩ 1% 1/10W
			R273	5012350	27.4KΩ 1% 1/10W
			R274	5021542	0.22Ω 5% 1/4W

C1-C4	4000233	220pF 5% 50V	C8	4000381	820pF 5% 50V
C5	4000277	22pF 5% 50V	C9-C14	4000408	47pF 5% 50V
C6	4000351	1.5nF 5% 50V	C15-C16	4000412	100pF 5% 50V
C7	4000412	100pF 5% 50V			

Δ indicates that static electricity may destroy the component

ABO-CENTER V/HENRIKSENS ELEKTRONIK

32	51	138	150	209	250		
	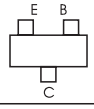	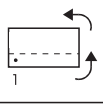	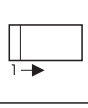	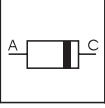	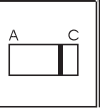		

Resistors not referred to are standard, see page 3-9

C17	4000418	330pF 5% 50V	C78	4010271	10nF 10% 50V
C18-	4000416	220pF 5% 50V	C79	4200824	22µF 20% 50V
C24			C80-	4010271	10nF 10% 50V
C25	4000418	330pF 5% 50V	C81		
C26	4000420	470pF 5% 50V	C82-	4010272	22nF -20+80% 50V
C27-	4000457	1.5nF 5% 50V	C84		
C28			C85	4010274	100nF -20+80% 25V
C29	4000420	470pF 5% 50V	C86	4010314	220nF -20+80% 25V
C30-	4000461	1nF 5% 50V	C87-	4201174	2.2µF 20% 50V
C33			C88		
C34	4010132	1nF 10% 50V	C89	4201301	220µF -20+50% 16V
C35	4010209	47nF 10% 50V	C90	4200824	22µF 20% 50V
C36	4000461	1nF 5% 50V	C91-	4201173	10µF 20% 50V
C37	4010132	1nF 10% 50V	C95		
C38	4010176	10nF -20+80% 50V	C96	4200824	22µF 20% 50V
C39	4010237	1nF 10% 50V	C97	4201537	1000µF 20% 35V
C40-	4010262	1.8nF 10% 50V	C98-	4201173	10µF 20% 50V
C41			C99		
C42-	4010269	6.8nF 10% 50V	C100-	4201173	10µF 20% 50V
C43			C106		
C44-	4010271	10nF 10% 50V	C107	4201474	330µF 20% 63V
C45			C108-	4201171	1µF 20% 50V
C48-	4010237	1nF 10% 50V	C109		
C50			C110	4201173	10µF 20% 50V
C51	4010263	2.2nF 10% 50V	C111-	4201170	0.47µF 20% 50V
C52-	4010271	10nF 10% 50V	C112		
C56			C113-	4201173	10µF 20% 50V
C59-	4010271	10nF 10% 50V	C121		
C65			C122-	4201174	2.2µF 20% 50V
C66-	4010274	100nF -20+80% 25V	C123		
C67			C124	4000287	220nF -20+80% 25V
C68	4010334	220nF 10% 16V	C125	4010272	22nF -20+80% 50V
C69	4010271	10nF 10% 50V	C126-	4010274	100nF -20+80% 25V
C70-	4010316	100nF 10% 25V	C127		
C71			C128	4200961	220µF 20% 10V
C72	4010316	100nF 10% 25V	C129-	4010237	1nF 10% 50V
C73-	4130307	150nF 10% 63V	C133		
C76			C134	4000290	22nF 10% 50V
C77	4201256	470µF 20% 25V			

L1	8021274	Coil 330µH 10%	L4-	8021003	Coil 100µH 5%
L2-	8020821	Coil 2.2µH 5%	L7		
L3					

F1	6604038	Fuse 1AF 250V

P1	7210418	Socket 7 pole DIN	P19	7220712	Plug 5 pole
P2-	7210689	Socket 8 pole DIN	P20	7220716	Plug 9 pole
P3			P21	7220709	Plug 2 pole
P4	7210904	Socket 16 pole ML-socket	P22	7220711	Plug 4 pole
			P23	7220710	Plug 3 pole
P11-	7220711	Plug 4 pole	P25	7220711	Plug 4 pole
P13			P100	7211195	Socket 10 pole
P14-	7220709	Plug 2 pole	P103-	7220711	Plug 4 pole
P15			P104		
P16	7220712	Plug 5 pole	P105	7211186	Socket 8 pole
P17	7220714	Plug 7 pole	P107	7220711	Plug 4 pole
P18	7220710	Plug 3 pole	P108	7220719	Plug 12 pole

ABO-CENTER / HENRIKSEN ELEKTRONIK

PCB14, 8001771 Master Link Audio interface

IC1Δ-IC7Δ	8341022	**138**	4558	IC8-IC10	8341024	**150**	4066
TR3	8320811	**51**	BC 857B	TR6	8320811	**51**	BC 857B
TR4-TR5	8320755	**51**	BC 847B				
R2	5011841		11.8KΩ 1% 1/8W	R14-R15	5011557		10KΩ 1% 1/8W
R4	5011841		11.8KΩ 1% 1/8W				
R5-R6	5011531		5.9KΩ 1% 1/8W	R19-R20	5011557		10KΩ 1% 1/8W
R8	5011841		11.8KΩ 1% 1/8W	R23-R26	5011571		75Ω 1% 1/8W
R10	5011841		11.8KΩ 1% 1/8W				
R11-R12	5011531		5.9KΩ 1% 1/8W				
C1-C2	4000277		22pF 5% 50V	C11-C14	4010166		100nF -20+80% 50V
C3-C4	4000241		100pF 5% 50V	C100-C101	4000345		1nF 5% 50V
C6-C7	4000241		100pF 5% 50V				

PCB15, 8001834 Transformer EU

TR1	8320427	**32**	BD 437				
TR2-TR4	8320428	**32**	BD 438				
D1-D4	8300023	**209**	1N 4002	D5-D14	8300907	**250**	DO-214BA
R10	5020625		2.7Ω 5% 0.3W				
C1-C6	4010166		100nF -20+80% 50V	C12	4201425		6800µF 20% 16V
				C13	4200821		1000µF -20+50% 6.3V
C7-C9	4010216		22nF 10% 100V	C14-C15	4201098		4700µF 20% 35V
C10	4201111		6800µF 20% 16V	C16-C19	4010166		100nF -20+80% 50V
C11	4201426		3300µF 20% 16V				
L1	8022295		Coil 2 x 0.4mH				
T1	8013501		Mains transformer 100V-120V-230V-240V				
F1-F4	6600155		Fuse 1.6 AT 250V				
F5	6600067		Fuse 2.5 AT 250V				
P24	7220715		Plug 8 pole				
	7219087		Mains socket				

PCB15, 8006798 Transformer US

R1	5000194		3.3Mohm 10% 1/2W
F1-F4	6600162		Fuse 1.6 AT 125V
F5	6600081		Fuse 2.5 AT 125V

All other electrical parts see PCB15, Transformer EU

PCB18, 8001817 Headphone

Δ *indicates that static electricity may destroy the component*

ABO-CENTER V/HENRIKSENS ELEKTRONIK

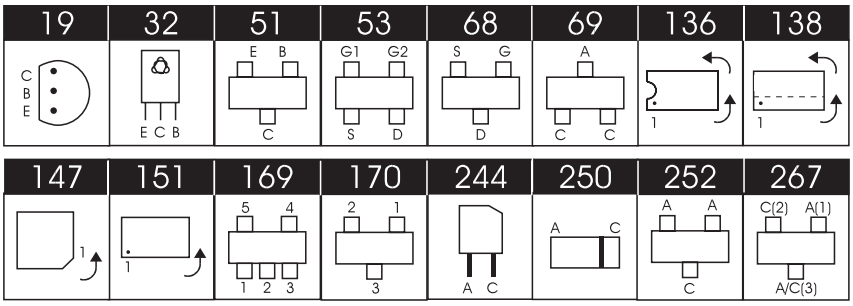

Resistors not referred to are standard, see page 3-9

PCB20, 8005738 IR receiver and left door sensor

IC1Δ	8341041	**138**	LM 324				
TR1-TR2	8320740	**51**	BF 840	TR17	8320769	**51**	BC 849C
TR3-TR7	8320755	**51**	BC 847B	TR18-TR21	8320811	**51**	BC 857B
TR12-TR16	8320755	**51**	BC 847B	TR22	8321072	**19**	ZTX 690B
				TR23	8321073	**19**	ZTX 790A
D1	8300482	**250**	LL 4148	D7-D8	8330145	**244**	Ir detector
D3-D6	8300482	**250**	LL 4148				
R20	5011985	13.3KΩ 1% 1/8W		R66	5012467	13.3Ω 1% 1/10W	
R28-R30	5012258	215KΩ 1% 1/8W		R67	5012466	22.1Ω 1% 1/10W	
R31	5012331	10KΩ 1% 1/10W		R68-R69	5020981	1.8Ω 10% 0.35W	
R53-R56	5012164	1MΩ 1% 1/8W		R70	5021047	10Ω 5% 0.14W	
R57	5012240	100KΩ 1% 1/10W		R71-R73	5012365	11KΩ 1% 1/10W	
C1	4010257	15nF 10% 50V		C24	4010314	220nF -20+80% 25V	
C2-C5	4000408	47pF 5% 50V		C25	4010195	2.7nF 5% 50V	
C6-C13	4000414	150pF 5% 50V		C26-C29	4010316	100nF 10% 25V	
C14-C19	4000420	470pF 5% 50V		C30	4130313	470nF 20% 63V	
C20-C21	4010263	2.2nF 10% 50V		C32	4200510	10µF 20% 16V	
C22-C23	4010271	10nF 10% 50V		C33	4010316	100nF 10% 25V	
				C34	4200510	10µF 20% 16V	
				C35	4010316	100nF 10% 25V	
				C217	4200510	10µF 20% 16V	
				C219	4200961	220µF 20% 10V	
L1	8020562	Coil 455KHz					
BP1	8030056	Cer. filter 455KHz					
P46	7220726	Plug 4 pole		P83	7220693	Contact pin 2 pole	
P47	7220725	Plug 3 pole		P132	7220730	Plug 8 pole	
P49	7220725	Plug 3 pole		P133	7220729	Plug 7 pole	
P50	7220728	Plug 6 pole		P250	7220727	Plug 5 pole	

PCB21, 8006799 Door sensor right

IC1Δ	8341041	**138**	LM 324				
TR3	8320755	**51**	BC 847B	TR36-TR37	8320755	**51**	BC 847B
TR7	8320755	**51**	BC 847B				
TR32	8320755	**51**	BC 847B	TR47	8320811	**51**	BC 847B
R2	5011632	1.5KΩ 1% 1/4W		R22	5012258	215KΩ 1% 1/8W	
R5	5012240	100KΩ 1% 1/10W		R25	5012164	1MΩ 1% 1/8W	
R6	5012331	10KΩ 1% 1/10W		R38	5012466	22.1Ω 1% 1/10W	
R10	5012164	1MΩ 1% 1/8W		R39	5012467	13.3Ω 1% 1/10W	
R12	5012258	215KΩ 1% 1/8W		R53⚠	5021047	10Ω 5% 0.14W	
R15	5012164	1MΩ 1% 1/8W		R65-R67	5012365	11KΩ 1% 1/10W	
R17	5012258	215KΩ 1% 1/8W					
R20	5012164	1MΩ 1% 1/8W					

⚠ *symbol of safety components, see page 2.1*

Δ *indicates that static electricity may destroy the component*

ABO-CENTER V/HENRIKSEN ELEKTRONIK

C2	4010316	100nF 10% 25V	
C4	4010263	2.2nF 10% 50V	
C8-C9	4000414	150pF 5% 50V	
C13-C14	4000414	150pF 5% 50V	
C18	4000414	150pF 5% 50V	
C19	4000229	150pF 5% 50V	
C23-C24	4000414	150pF 5% 50V	
C27	4010157	10nF 10% 50V	
C30	4010271	10nF 10% 50V	
C33	4200826	10µF 20% 16V	
C49	4010195	2.7nF 5% 50V	
C52	4200961	220µF 20% 10V	
C57-C58	4010316	100nF 10% 25V	
C59	4200510	10µF 20% 16V	
C60	4010316	100nF 10% 25V	

P1	7220710	Plug 3 pole
P2	7220728	Plug 6 pole
P3	7220727	Plug 5 pole

PCB28, 3358279 Light supply

TR1	8320425	**32**	BD 436
D1-D4	8300557	**250**	BYM10
C1-C3	4000345		1nF 5% 50V

PCB86, 8006800 Tuner-FM/AM-RDS-Stereo decoder EU/US

IC200Δ	8343626	**147**	TDA 7421S
IC201Δ	8343652	**151**	LMC 272
IC203Δ	8342519	**151**	EEPROM M24C02-MN6T
IC300Δ	8343681	**136**	TDA 7403
IC400Δ	8343809	**170**	MAX 809L
IC401Δ	8343673	**147**	µP H8S/2138
IC402Δ	8342568	**136**	SAA 6579T
IC500Δ	8343733	**168**	L 4931

Advanced adjustments procedure when replacing this component. Replacement of PCB86 is recommended 8006800.

TR200	8320753	**51**	BC 856B
TR201-TR202	8321276	**53**	Mosfet 9V 1GHz
TR203	8321277	**169**	HN 3G01J
TR204	8320936	**51**	BC 847C
TR301	8321198	**136**	PUM X1
TR302	8320778	**51**	BC 857
TR303-TR304	8321080	**51**	FMMT 491ATA
TR400-TR401	8320856	**68**	2N 7002
TR402	8320778	**51**	BC 857
TR403-TR404	8320755	**51**	BC 847B
TR500	8320971	**51**	BC 807-40
TR501	8320936	**51**	BC 847C
TR502	8321196	**136**	PUM Z1
TR503-TR504	8320971	**51**	BC 807-40

D200-D203	8301140	**252**	BB 914
D204-D205	8301143	**267**	BAR 63-04
D400	8300894	**69**	BAW 56
D401	8300895	**252**	BAV 70
D402	8300520	**250**	Z6.8V 5% 0.5W
D500	8301056	**250**	Z2.7V 2% 0.4W
D501	8301064	**250**	Z5.1V 2% 0.4W

R208	5013156	2.2KΩ 1% 1/16W
R209	5012331	10KΩ 1% 1/10W
R216	5013244	3.9KΩ 1% 1/16W
R226	5013152	1.2KΩ 5% 1/16W
R231	5012238	33KΩ 1% 1/10W
R234	5012238	33KΩ 1% 1/10W
R235-R236	5012331	10KΩ 1% 1/10W
R237	5012238	33KΩ 1% 1/10W
R238-R239	5012331	10KΩ 1% 1/10W
R240	5012559	5.1KΩ 1% 1/10W
R300	5013242	2.7KΩ 1% 1/16W
R301	5013236	820Ω 1% 1/16W
R400-R401	5011903	180Ω 1% 1/4W
R415	5013239	1.5KΩ 1% 1/16W
R419	5030051	4 x 1KΩ 5% 1/16W
R425-R426	5013246	5.6KΩ 1% 1/16W
R428	5013243	3.3KΩ 1% 1/16W
R514	5013238	1.2KΩ 1% 1/16W
R517	5021532	270Ω 1% 1/4W

C200	4000404	22pF 5% 50V	C209-C210	4011135 100nF -20+80% 16V
C201	4001127	22pF 5% 50V		
C203	4001121	6.8pF 50V	C211	4010434 4.7µF
C204	4011122	10nF 10% 50V	C212	4000404 22pF 5% 50V
C205	4011134	100nF 10% 16V	C213	4001118 3.9pF 5% 50V
C206	4010419	4.7µF 10% 10V	C214-C215	4001125 15pF 5% 50V
C207	4001125	15pF 5% 50V		
C208	4011134	100nF 10% 16V	C216	4001143 470pF 5% 50V

Δ *indicates that static electricity may destroy the component*

ABO-CENTER V/HENRIKSENS ELEKTRONIK

19	51	105	138	151	250		
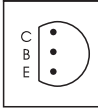	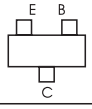	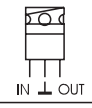	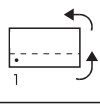	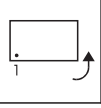	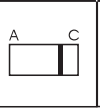		

Resistors not referred to are standard, see page 3-9

C217	4001125	15pF 5% 50V	C281-	4000408	47pF 5% 50V
C218-	4011135	100nF -20+80% 16V	C282		
C219			C283-	4010274	100nF -20+80% 25V
C220	4001143	470pF 5% 50V	C287		
C221	4001120	5.6pF 5% 50V	C288	4000494	4.7nF 10% 50V
C222-	4001118	3.9pF 5% 50V	C289-	4010274	100nF -20+80% 25V
C223			C290		
C224	4011135	100nF -20+80% 16V	C291	4011134	100nF 10% 16V
C225	4001143	470pF 5% 50V	C292-	4011122	10nF 10% 50V
C226	4001121	6.8pF 50V	C294		
C227-	4011134	100nF 10% 16V	C295	4001143	470pF 5% 50V
C231			C296	4011135	100nF -20+80% 16V
C232	4010387	470nF 10% 16V	C300	4010419	4.7µF 10% 10V
C233	4010323	1µF -20+80% 16V	C301	4011128	33nF 10% 25V
C234	4010274	100nF -20+80% 25V	C302	4011120	6.8nF 10% 50V
C236	4010387	470nF 10% 16V	C303	4011130	47nF 10% 16V
C238	4000493	1.2nF 10% 50V	C304	4010421	1µF 10% 16V
C239	4000494	4.7nF 10% 50V	C305	4010435	10µF -20+80% 25V
C240	4000495	3.3nF 10% 50V	C306	4010419	4.7µF 10% 10V
C241	4000496	33nF 10% 50V	C307	4011134	100nF 10% 16V
C242	4010419	4.7µF 10% 10V	C309-	4010420	10µF 10% 10V
C243	4011134	100nF 10% 16V	C310		
C244	4000495	3.3nF 10% 50V	C311	4010237	1nF 10% 16V
C245	4010420	10µF 10% 10V	C313	4010237	1nF 10% 16V
C246	4001136	120pF 5% 50V	C315-	4011110	1nF 10% 50V
C247	4011130	47nF 10% 16V	C317		
C248-	4010420	10µF 10% 10V	C318	4001138	180pF 5% 50V
C250			C400	4011110	1nF 10% 50V
C251	4010316	100nF 10% 25V	C401	4010321	470nF -20+80% 16V
C252-	4011134	100nF 10% 16V	C402	4011122	10nF 10% 50V
C253			C403	4010237	1nF 10% 16V
C254	4010421	1µF 10% 16V	C404-	4001131	47pF 5% 50V
C255	4011134	100nF 10% 16V	C407		
C256	4010316	100nF 10% 25V	C408	4010321	470nF -20+80% 16V
C257	4010323	1µF -20+80% 16V	C409	4011110	1nF 10% 50V
C258	4010237	1nF 10% 50V	C410	4011056	4 x 1nF 10% 50V
C259	4001135	100pF 5% 50V	C411	4001134	82pF 5% 50V
C260-	4011122	10nF 10% 50V	C412	4011122	10nF 10% 50V
C261			C413	4011110	1nF 10% 50V
C262	4010419	4.7µF 10% 10V	C414	4001141	330pF 5% 50V
C263	4001130	39pF 5% 50V	C415	4011122	10nF 10% 50V
C264	4001133	68pF 5% 50V	C416	4010419	4.7µF 10% 10V
C265	4001130	39pF 5% 50V	C417	4011122	10nF 10% 50V
C266	4010322	4.7µF -20+80% 16V	C418	4001143	470pF 5% 50V
C267	4011134	100nF 10% 16V	C419	4001131	47pF 5% 50V
C268	4010420	10µF 10% 10V	C420	4001134	82pF 5% 50V
C269-	4011134	100nF 10% 16V	C421	4011110	1nF 10% 50V
C270			C422	4010321	470nF -20+80% 16V
C271-	4001127	22pF 5% 50V	C500	4010315	22nF 10% 25V
C274			C501	4010267	4.7nF 10% 50V
C275	4001130	39pF 5% 50V	C502	4010316	100nF 10% 25V
C276	4000494	4.7nF 10% 50V	C503	4010434	4.7µF
C277	4010421	1µF 10% 16V	C505	4010316	100nF 10% 25V
C278	4010316	100nF 10% 25V	C506	4010315	22nF 10% 25V
C279	4011134	100nF 10% 16V	C507	4011122	10nF 10% 50V

L200	8021078	Coil 1µH 10%	L206	8021321	Coil 10.7MHz
L201	8021319	Coil 97nH	L207	8021325	Coil 1mH
L202-	8021320	Transformer 97nH	L208	8021323	Transformer 450KHz
L203			L209	8020909	Coil 330µH 10% 796KHz
L204	8021318	Coil 71nH	L210	8021324	Coil 10µH
L205	8021322	Transformer 10.7MHz			

ABO-CENTER / HENRIKSEN ELEKTRONIK

3.9 List of electrical parts 3.9

ABO-CENTERV/HENRIKSENS ELEKTRONIK

L211-L212	8020626		Coil 470µH 5%	L303	8021345		Coil 10mH
L213-L214	8020714		Coil 68µH 10%	L400-L404	8020821		Coil 2.2µH 5%
L215-L217	8020821		Coil 2.2µH 5%	L500-L501	8020822		Coil 3.3µH 5%
L301-L302	6000064		Jumper				
BP200	8030391		Cer. filter 450KHz ±KHz				
BP201-BP203	8030400		Cer. filter 10.7MHz				
X200	8090274		Crystal 10.25MHz	X400	8090206		Crystal 8.664MHz
F500	6604039		Fuse 200mA				
P100	7210612		Socket antenna mini-jack	P105	7221157		Plug 6/6 pole
P101	7221373		Male connector	P106	7211222		Socket 6 pole
P102	7221082		Plug 2 pole	P107	7221082		Plug 2 pole
P103	7211221		Socket 4 pole	P400	7211221		Socket 4 pole
P104	7221131		Plug 4 pole				
MP100	3302584		Shield f/FM-tuner	MP201	3320431		Shield
MP200	3320430		Shield radio				

PCB86, 8006801 Tuner-FM/AM-RDS-Stereo decoder JAP

IC203Δ	8342519	**151**	EEPROM M24C02-MN6T *Advanced adjustments procedure when replacing this component.* *Replacement of PCB86 is recommended 8006801.*	
C248-C250	4010420		10µF 10% 10V	

All other electrical parts see PCB86, Tuner EU/US

PCB89, 8001867 Interface f/CD PRO MKI

IC1	8340796	**105**	7805 2% 5V	IC3-IC4	8341022	**138**	4558
IC2Δ	8341041	**138**	LM 324				
TR2	8320755	**51**	BC 847B	TR4	8320755	**51**	BC 847B
TR3	8321050	**19**	ZTX 788-STZ	TR5	8320811	**51**	BC 857B
D3	8300201	**250**	Z6.2V 5% 0.4W				
R27-R28	5011986		15.4KΩ 1% 1/8W	R34-R35	5012331		10KΩ 1% 1/10W
R29-R30	5012290		4.87KΩ 1% 1/10W	R36-R39	5011557		10KΩ 1% 1/8W
R31-R32	5012297		5.62KΩ 1% 1/10W	R40-R41	5012331		10KΩ 1% 1/10W
C1-C2	4000351		1.5nF 5% 50V	C20-C21	4201173		10µF 20% 50V
C3-C4	4000414		150pF 5% 50V	C23-C24	4201174		2.2µF 20% 50V
C5-C6	4000416		220pF 5% 50V	C25	4200524		10µF 20% 25V
				C26	4010274		100nF -20+80% 25V
C11-C13	4010314		220nF -20+80% 25V	C30	4010272		22nF -20+80% 50V
				C31	4010166		100nF -20+80% 50V
C14-C16	4010272		22nF -20+80% 50V	C37	4010314		220nF -20+80% 25V
				C38	4010274		100nF -20+80% 25V
C17-C19	4010274		100nF -20+80% 25V	C39	4010271		10nF 10% 50V
P65	7220709		Plug 2 pole	P200	7220711		Plug 4 pole
P66-P67	7220711		Plug 4 pole	P204	7220713		Plug 6 pole
				P207	7220711		Plug 4 pole
P68	7220710		Plug 3 pole				

Δ indicates that static electricity may destroy the component

Standard resistors

Resistors SMD 2% 1/8 W
SMD 5% 1/8 W

Glue dots, approx. 200, part no. 3181932

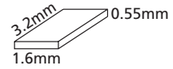

	5%	2%	2%	2%	2%	2%	5%	2%
	x1	x10	x100	x1K	x10K	x100K	x1M	x10M
1.0	5011623	5011647	5011218	5011227	5011241	5011256	5011267	5011730
1.1	5011624	5011648	5011669	5011681	5011689	5011694	5011707	
1.2	5011625	5011649	5011219	5011682	5011490	5011257	5011708	
1.3	5011626	5011650	5011670	5011683	5011242	5011258	5011709	
1.5	5011627	5011651	5011220	5011228	5011243	5011259	5011710	
1.6	5011628	5011652	5011671	5011684	5011690	5011695	5011711	
1.8	5011629	5011653	5011672	5011229	5011244	5011260	5011712	
2.0	5011630	5011654	5011673	5011685	5011691	5011696	5011713	
2.2	5011216	5011655	5011674	5011230	5011245	5011261	5011714	
2.4	5011634	5011656	5011675	5011686	5011246	5011697	5011715	
2.7	5011635	5011657	5011497	5011231	5011247	5011262	5011716	
3.0	5011731	5011658	5011499	5011500	5011692	5011698	5011717	
3.3	5011217	5011659	5011676	5011232	5011248	5011263	5011718	
3.6	5011636	5011660	5011677	5011687	5011249	5011264	5011719	
3.9	5011637	5011661	5011221	5011233	5011491	5011699	5011720	
4.3	5011638	5011662	5011498	5011688	5011492	5011700	5011721	
4.7	5011639	5011269	5011222	5011234	5011250	5011265	5011722	
5.1	5011640	5011663	5011678	5011235	5011493	5011701	5011723	
5.6	5011641	5011664	5011223	5011236	5011251	5011702	5011724	
6.2	5011642	5011665	5011224	5011237	5011693	5011703	5011725	
6.8	5011643	5011666	5011225	5011238	5011252	5011704	5011726	
7.5	5011644	5011667	5011679	5011239	5011253	5011705	5011727	
8.2	5011645	5011270	5011226	5011240	5011254	5011266	5011728	
9.1	5011646	5011668	5011680	5011489	5011255	5011706	5011729	

Resistors SMD 5% 1/10 W

Glue dots, approx. 200, part no. 3181932

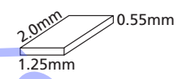

	x1	x10	x100	x1K	x10K	x100K	x1M	x10M
0.0	6000072							
1.0		5011920	5011932	5011944	5011956	5011968	5011980	5012275
1.2	5012326	5011921	5011933	5011945	5011957	5011969	5012267	
1.5	5012379	5011922	5011934	5011946	5011958	5011970	5012268	
1.8	5012380	5011923	5011935	5011947	5011959	5011971	5011989	
2.2		5011924	5011936	5011948	5011960	5011972	5012220	
2.7		5011925	5011937	5011949	5011961	5011973	5012269	
3.3		5011926	5011938	5011950	5011962	5011974	5012261	
3.9		5011927	5011939	5011951	5011963	5011975	5012270	
4.7	5012472	5011928	5011940	5011952	5011964	5011976	5012271	
5.6		5011929	5011941	5011953	5011965	5011977	5012272	
6.8		5011930	5011942	5011954	5011966	5011978	5012273	
8.2		5011931	5011943	5011955	5011967	5011979	5012274	

Resistors SMD 5% 1/16 W

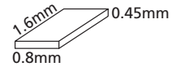

	x1	x10	x100	x1K	x10K	x100K	x1M	x10M
1.0	5013201	5013213	5013225	5013237	5013249	5013261	5013273	5013285
1.2	5013202	5013214	5013226			5013262	5013274	
1.5	5013203	5013215	5013227			5013263		
1.8	5013204	5013216	5013228	5013240			5013276	
2.2	5013205	5013217	5013229	5013241	5013253	5013265	5013277	
2.7	5013206	5013218			5013254	5013266	5013278	
3.3	5013207		5013231	5013040	5013255	5013267	5013279	
3.9	5013208	5013220				5013268	5013280	
4.7	5013209	5013221	5013233	5013245	5013257	5013269	5013281	
5.6	5013210	5013222	5013234		5013258	5013270	5013282	
6.8	5013211	5013223	5013235		5013259	5013271	5013283	
8.2	5013212	5013224		5013135	5013260	5013272	5013284	

List of mechanical parts
Front

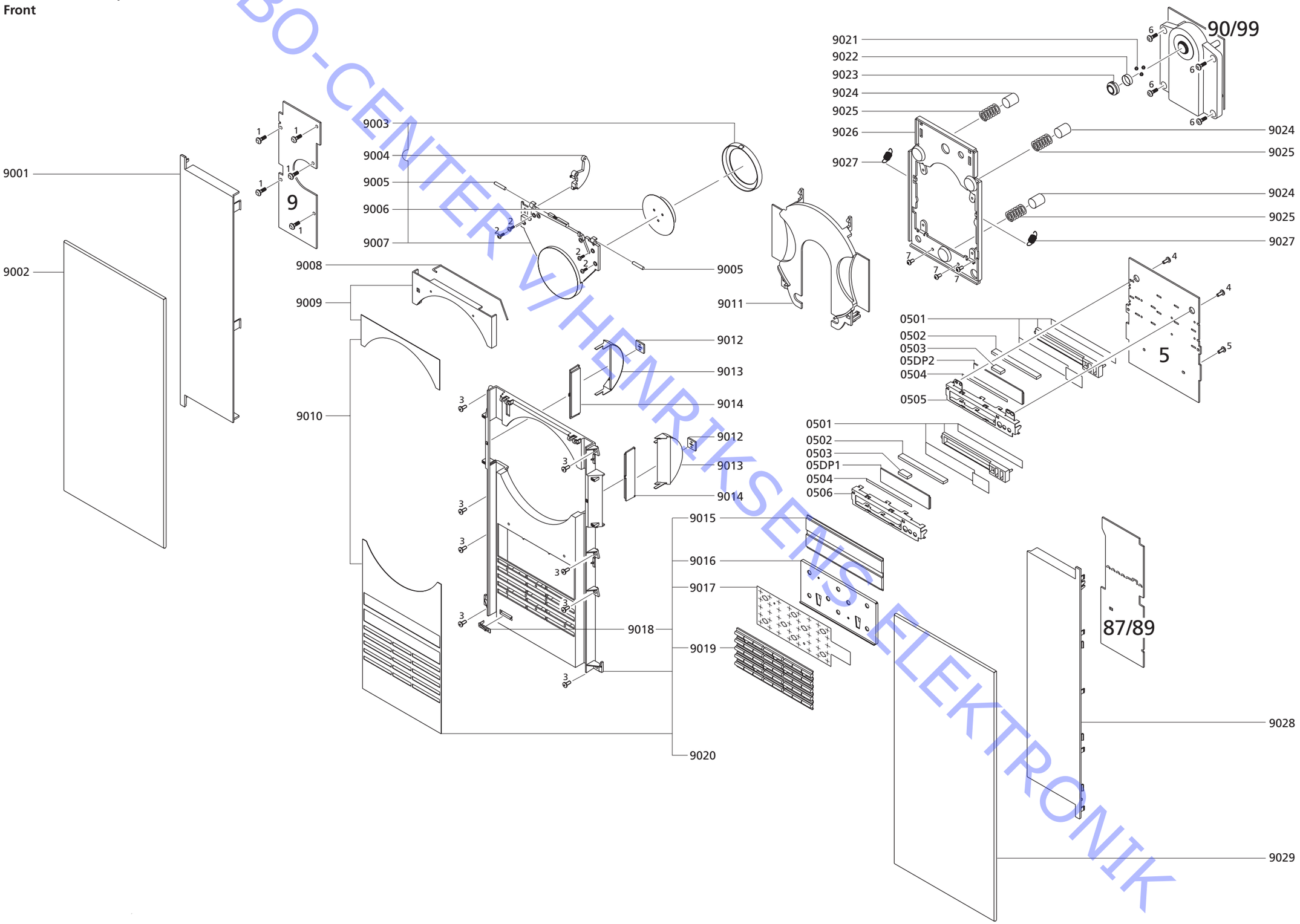

ABO-CENTER V/HENRIKSENS ELEKTRONIK

ABC CENTER V/HENRIKSENS ELEKTRONIK

Front

9001	3162622	Cover, left
9002	3162830	Glass, left
9003	2802056	Ring f/clamper with magnet strips
9004	3017028	Wheel
9005	2830111	Cylinder pin
9006	3162652	Clamper
9007	3152726	Cover f/clamper
9008	2819251	Spring
9009	3164877	Cover
9010	3904124	Alu foil w/tape
9011	3162461	Cover f/CD
9012	8230100	PCB w/lamp
9013	3131356	Light cabinet
9014	3322145	Window
9015	3322137	Window
9016	2572045	Spacer
9017	7500270	Contact spring
9018	2816257	Ground spring
9019	2776665	Set of buttons
9020	3451632	Front piece, complete
9021	2917025	Ball
9022	2816235	Spring
9023	2311045	Magnet top
9024	3333017	Rubber damping
9025	2812132	Compression spring
9026	3112418	Chassis
9027	2810254	Tension spring
9028	3162623	Cover, right
9029	3162831	Glass, right

05Module	8001362	Display
0501	8330286	LED backlight module
0502	7500272	Contact rubber
0503	2574079	Rubber pad
0504	3370148	Foil
0505	3151285	Holder, upper
0506	3151292	Holder, lower
05DP1	8330259	Display, lower
05DP2	8330468	Display, upper

09module	8001550	Light and motor control

87Module	8001823	Interface f/CD PRO MKII introduced from serial no. _____

89Module	8001867	Interface f/CD PRO MKI

90Module	8420240	CD PRO MKII incl. pos. no. 9021, 9022 and 9023 introduced from serial no. _____

99Module	8420218	CD PRO MKI incl. pos. no. 9021, 9022 and 9023

Screws

1	2013144	Screw 3 x 8mm
2	2036036	Screw 2.5 x 4mm
3	2013118	Screw 3 x 8mm
4	2013172	Screw 3 x 6mm
5	2036085	Screw 2.5 x 6mm
6	2038118	Screw 3 x 6mm
7	2038133	Screw 3 x 11mm

4.3 List of mechanical parts

ABO-CENTER V/HENRIKSENS ELEKTRONIK

Chassis

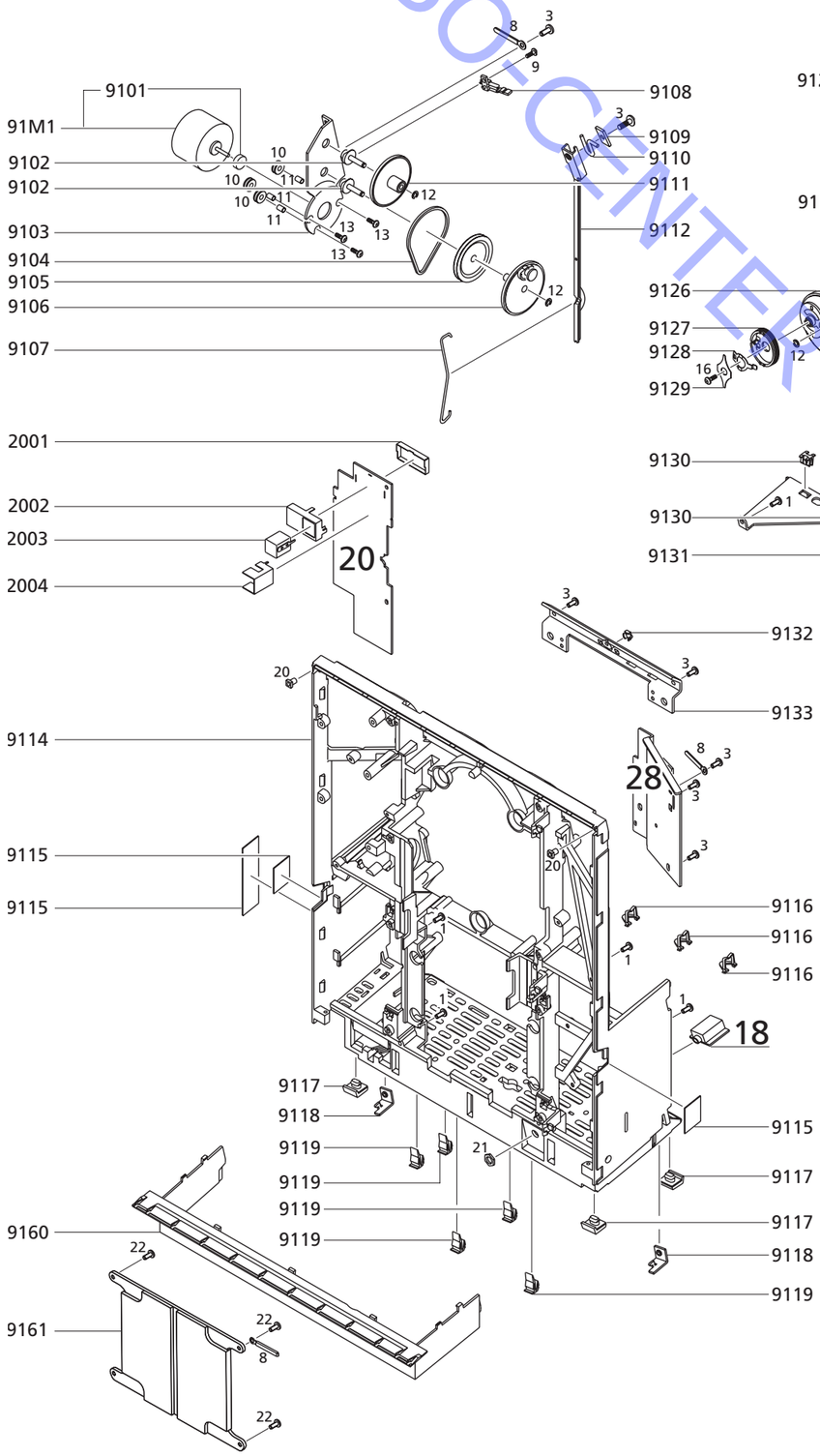

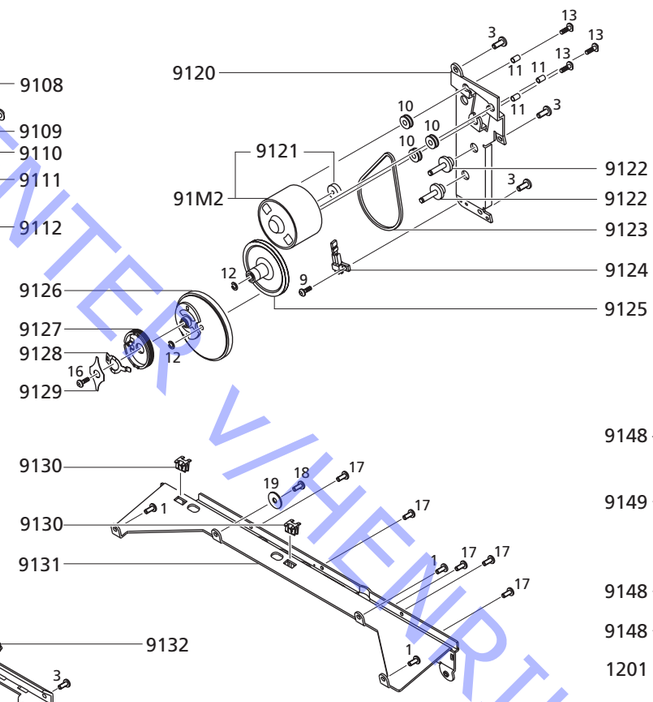

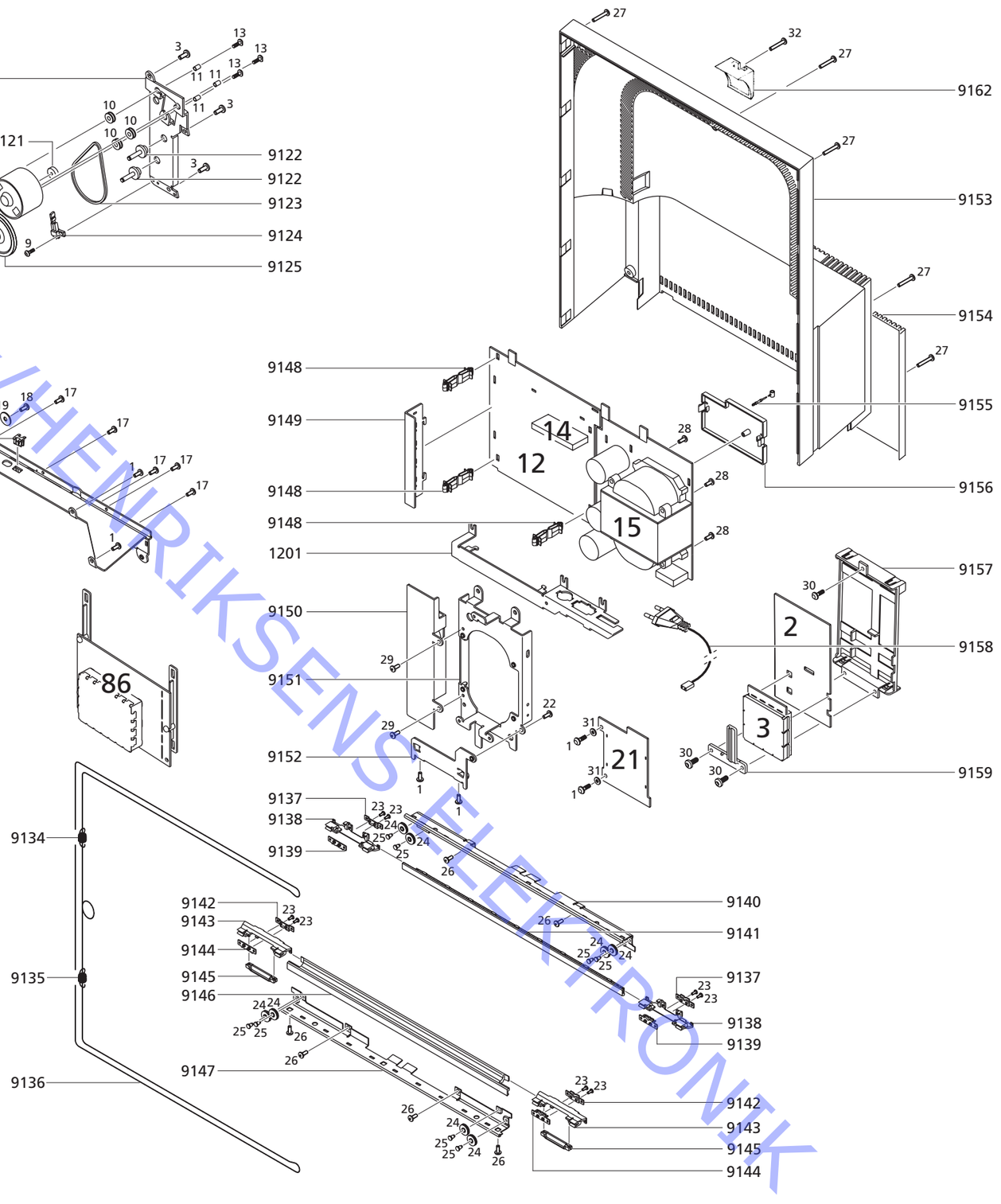

4.4 List of mechanical parts 4.4

ABC-CENTER V/HENRIKSENS ELEKTRONIK

Chassis

9101	2722055	Belt pulley
9102	2831070	Shaft
9103	3151277	Holder
9104	2732076	Belt
9105	2722054	Belt pulley
9106	2700152	Gear wheel, complete
9107	2819295	Spring
9108	6276391	Wire w/switch
9109	3035062	Slide shoe
9110	2819254	Spring
9111	2700092	Gear wheel
9112	2854153	Arm
9114	3114455	Chassis incl. pos. no. 9117, 9118, 9119, 9133 and 9152
9115	3947546	Copper tape - 1.6m
9116	3152747	Wire holder
9117	3103303	Foot
9118	2642030	Clamp
9119	2311029	Clip
9120	3151276	Holder
9121	2722055	Pulley
9122	2831071	Shaft
9123	2732092	Belt
9124	6276391	Wire w/switch
9125	2722053	Belt pulley
9126	2700093	Gear wheel
9127	2724087	Cord pulley
9128	2815029	Ground spring
9129	2815032	Leaf spring
9130	2311030	Clip
9131	2548254	Bracket
9132	3010033	Stop f/transport screw
9133	3031587	Bracket
9134	2810133	Tension spring
9135	2810155	Spring
9136	3955042	Cord
9137	2391086	Locking piece
9138	3152727	Holder
9139	2391087	Locking piece
9140	2548247	Bracket
9141	3013088	Guide rail incl. pos. no. 9137, 9138 and 9139
9142	2391086	Locking piece
9143	3152727	Holder
9144	2391087	Locking piece
9145	3035060	Slide shoe
9146	3013089	Guide rail incl. pos. no. 9142, 9143, 9144 and 9145
9147	2548247	Bracket
9148	3030116	Hinge
9149	3358275	Heat sink
9150	3358274	Heat sink
9151	3152730	Holder
9152	3124121	Mounting plate
9153	3430605	Rear cover
9154	3164900	Cable cover
9155	3151321	Strap
9156	3300120	Screen
9157	3031682	Frame
9158	6100273	Mains cable, type 2671 (EU)
	6100329	Mains cable, type 2672 (GB)
	6100307	Mains cable, type 2673-2676 (USA-CDN-TWN)
	6100331	Mains cable, type 2674 (JPN)
	6100332	Mains cable, type 2675 (AUS)
9159	3031689	Holder f/PCB3
9160	2560279	Rail
9161	3124129	Counterweight
9162	3152757	Holder f/antenna

91M1	8400190	Motor
91M2	8400189	Motor

02Module	8006796	Interface f/µPH8
03Module	8006797	µPH8 Microcomputer
12Module	8001833	Power supply, Input select & Pre-amplifier
1201	3152799	Holder
		Sockets, see wiring diagram
14Module	8001771	Master Link Audio interface
15Module	8001834	Transformer EU
		Sockets, see wiring diagram
15Module	8006798	Transformer US
		Sockets, see wiring diagram
18Module	8001817	Headphone
20Module	8005738	IR receiver and left door sensor
2001	3300124	Screen, inner
2002	3300123	Screen, outer
2003	3304135	Shielded box
2004	3300129	Screen
91D1	6277348	Wire - Plug with reception diode
91D2	6277061	Wire - Plug with transmitter diode, left
91D3	6277061	Wire - Plug with transmitter diode, left
21Module	8006799	Door sensor right
91D4	6277348	Wire - Plug with reception diode
91D5	6277118	Wire - Plug with transmitter diode, right
91D6	6277118	Wire - Plug with transmitter diode, right

Screws, washers etc.

1	2013144	Screw 3 x 8mm
3	2013118	Screw 3 x 8mm
8	7530119	Solder tag
9	2011310	Screw 2.2 x 4.5mm
10	2938237	Bushing
11	2930074	Spacer
12	2390001	Lock washer
13	2036061	Screw 2.6 x 6.5mm
16	2013190	Screw 3 x 8mm
17	2038149	Screw 3 x 8mm
18	2013218	Screw
19	2625002	Washer
20	2389064	Nut
21	2380145	Nut
22	2058017	Screw 3 x 8mm
23	2036066	Screw 2.5 x 2.7mm
24	2724078	Cord pulley
25	2364019	Rivet
26	2011050	Screw 3 x 8mm
27	2038094	Screw 3 x 10mm
28	2039064	Screw 3 x 12mm
29	2039062	Screw 3 x 5mm
30	2039035	Screw 3 x 8mm
31	2622052	Washer
32	2038116	Screw 3 x 20mm

4.5 List of mechanical parts

ABO-CENTER V/HENRIKSENS ELEKTRONIK

Wire bundles

See wiring diagram page 2.4
The part no. is printed on the diagram above the wire bundle, as shown.

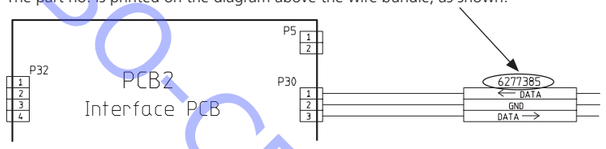

Accessories

See specification guidelines page 1.3

Packing

3392405	Outer carton
3397824	Foam packing
3946038	Foil

User's Guide

3508252	Danish
3508253	Swedish
3508254	Finnish
3508255	English
3508256	German
3508257	Dutch
3508258	French
3508259	Italian
3508260	Spanish
3508261	Japanese
3508262	Taiwanese
3508263	Korean
3508264	Greek
3508265	Hebrew
3508266	Brazilian

Reference book

3505687	Danish
3505688	Swedish
3505689	Finnish
3505690	English
3505691	German
3505692	Dutch
3505693	French
3505694	Italian
3505695	Spanish
3505696	Japanese
3505697	Taiwanese
3505698	Korean
3505699	Greek
3505700	Hebrew
3505701	Brazilian

Stand, type 2051

1205111, silver
1205194, green
1205196, black
1205198, blue
1205199, red

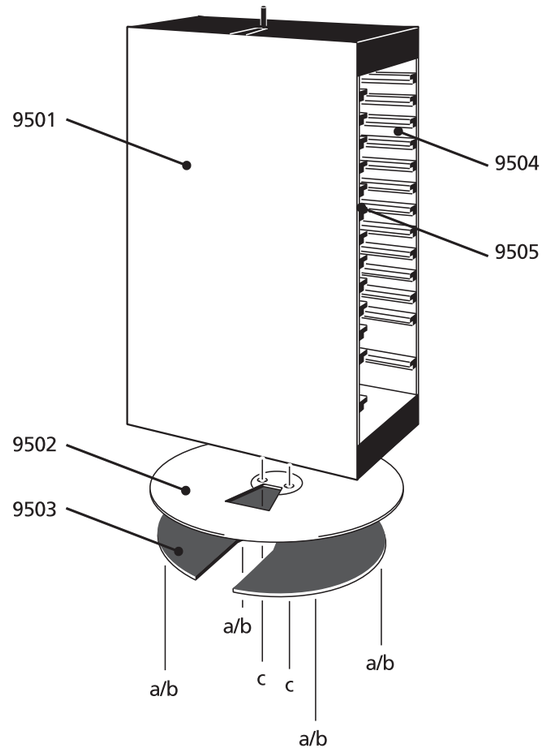

9501	3451589	Cover plate, silver
	3451591	Cover plate, green
	3451592	Cover plate, black
	3451593	Cover plate, blue
	3451594	Cover plate, red
9502	3458890	Cover plate, bottom
9503	2752043	Bottom
9504	3013094	Guide rail, right
9505	3013094	Guide rail, left
a	3103313	Foot, spike
b	3103322	Foot, soft
c	2046040	Screw 6 x 63mm
c	2046041	Screw 6 x 66mm
	3502921	Setting-up guide
	3397953	Foam packing
	3392423	Outer carton

Center wall bracket, black, type 2052
1205266

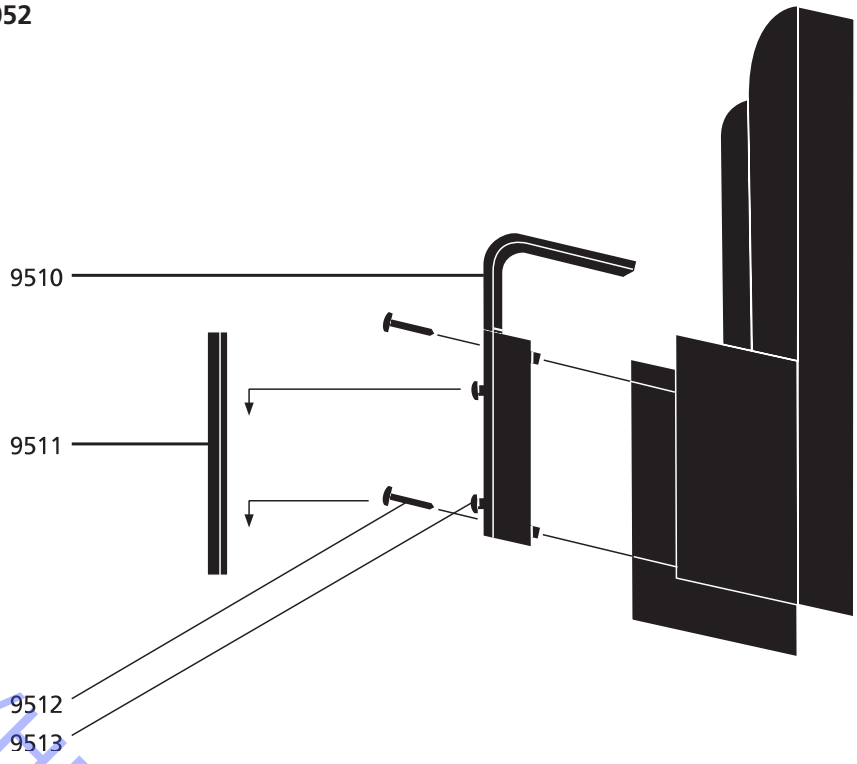

9510	2777052	Handle, right
	2777053	Handle, left
9511	1205266	Wall bracket
9512	2038130	Screw 3 x 25mm
9513	2043016	Screw 4 x 10mm
	2930126	Bush
	3390432	Wire holder
	3502922	Setting-up guide

ABO-CENTER V/HENRIKSENS ELEKTRONIK

System wall bracket, black, type 2087
1208766

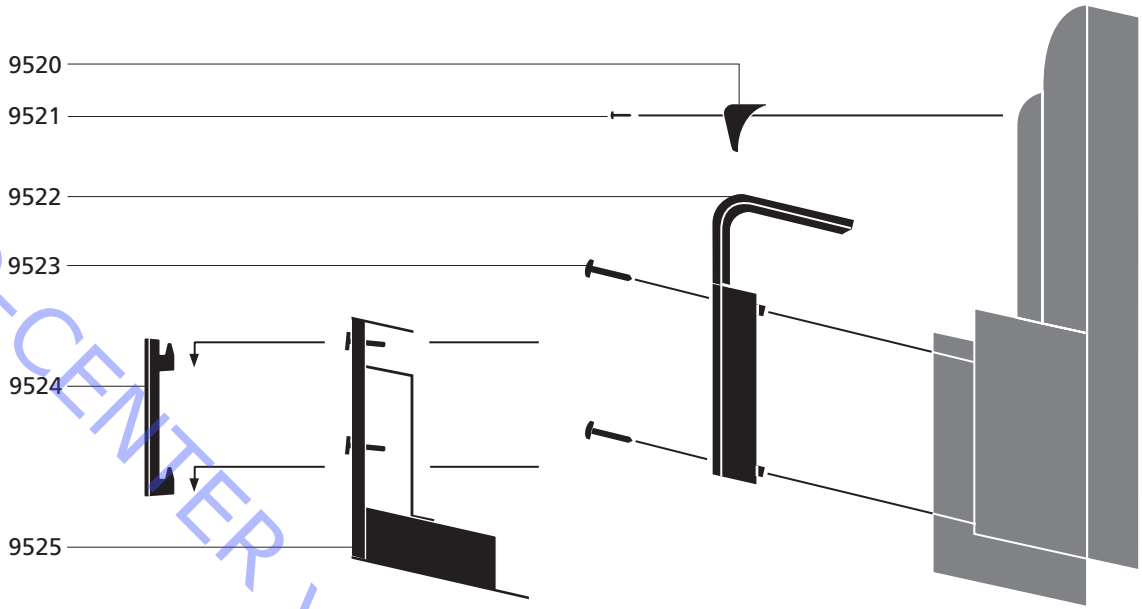

9520	3152790	Holder f/antenna
9521	2038116	Screw 3 x 20mm
9522	2777052	Holder, right
	2777053	Holder, left
9523	2038130	Screw 3 x 25mm
9524	3031319	Wall plate
9525	1208726	System wall bracket, complete

	3390341	Screw assortment
	3390342	Wire holder assortment
	3502996	Setting-up guide
	3392185	Outer carton
	3397774	Foam packing

ABO-CENTER V/HENRIKSENS ELEKTRONIK

TM (test mode) names/function for adjustments and service

Tuner test modes

TM 01: Automatic offset-adjustment for FM
TM 02: Manual offset-adjustment for FM
TM 03: Status for offset-adjustment
TM 04: Variant status
TM 06: Check RDS name
TM 07: Setting up of tuner variant

Master test modes

TM 20: Test of display functions
TM 21: Open ML-out
TM 22: Test of keyboard functions
TM 23: Software version
TM 24: Service operation counter
TM 25: Open ML-in
TM 27: Service of error detection
TM 28: Validity test for ROM/RAM/EEPROM
TM 32: Read-out of product ID
TM 34: Read-out of options
TM 35: Power down ON
TM 36: Power down OFF

CD test modes

TM 61: Focus on
TM 62: Focus off
TM 63: Starts turntable motor
TM 64: Stops turntable motor
TM 65: Light pen to outermost position
TM 66: Light pen to the innermost position
TM 67: Starts CD
TM 68: Stops CD

Test mode activating

Wait 20 - 30 sec. after connecting to mains.
By means of keyboard from St.by mode: Press **SOUND 0 2 5 8** with no more than 2 sec. between the individual enterings.
By means of remote control from St.by (can only be done if the product is not in option 0) :
Press **SHIFT 9 0 2 5 8** with only 2 sec. between.
The remote control has to be in RADIO or CD option.
In TM the tuner is fully functional and may overwrite the display but the TM will continue.

Deactivating

Press ● and the display shows "TM OFF" or disconnect from mains.

ABO-CENTER V/HENRIKSENS ELEKTRONIK

Glass doors lock

When the glass doors are locked it is not possible to open them by magic open.
The glass doors can only be locked if the product is in St. by, the glass doors are closed and only by remote control.
Press **SHIFT 9 0 3 6 9** with no more than 2 sec. between the individual entering.
The display shows "LOCKED".
To unlock the glass doors press **SHIFT 9 0 3 6 9** with no more than 2 sec. between the individual entering.
The display shows "UNLOCKED".
The function will be remembered in NVRAM after disconnecting from mains.

From TM01 to TM09.

- Wait 20 - 30 sec. after connecting to mains.
- By keyboard from St.by mode: Press **SOUND 0 2 5 8 RADIO** with no more than 2 sec. between the individual entering. Then key in the TM no.
- By remote control from St.by (can only be done if the product is not in option 0):
- Press **SHIFT 9 0 2 5 8** with no more than 2 sec. between the individual entering. Then key in TM no.

TM01

Automatic offset-adjustment for FM is done by letting the tuner search for the frequency 100 MHz (84 MHz for Japan) and when the signal is found the offset will be calculated and stored in NVRAM. The display shows "A OFFSET".
If failure the display shows "TM ERROR".

TM02

Manual offset-adjustment for FM is done by key-in a frequency. The tuner search tunes for this frequency and the offset will be calculated and stored in NVRAM.
The display shows "M OFFSET".
If failure the display shows "TM ERROR".

TM03

Read-out offset status.
If the offset-adjustment is needed the display shows "TM ERROR".
If the result of the offset-adjustment is positive the display shows "OFFSET n".
If the result of the offset-adjustment is negative the display shows "OFFSET -n".
The figure n is in steps of 12.5 kHz.

TM04

Read-out variant status: EUROPA (EU) FM, EUROPA (EU) FM/AM, USA (US) and JAPAN (JP). The display shows e.g. "EU FM/AM".
If failure the display shows "TM ERROR".

TM06

Checking that the RDS name of the radio programme in question is RDS-PS.
The display shows "TM OK".
If wrong RDS name or if name is missing the display shows "TM ERROR".

ABO-CENTER V/HENRIKSENS ELEKTRONIK

TM07

Tuner variant setup:
If from EU or AUS to US:
Key in the 3 digits indicating the choice.
No. 0: 003 = variant US
No. 1: 001 = RDS on, or 000 = RDS off
No. 2: 175 = FM starts in 500 kHz
No. 3: 216 = FM stops in 500 kHz
No. 4: 075 = Deemphas in µs
No. 5: 000 = LW starts in kHz dividing with AM raster. 0 if no LW
No. 6: 000 = LW stops in kHz dividing with AM raster. 0 if no LW
No. 7: 053 = MW starts in kHz dividing with AM raster. 0 if no MW
No. 8: 171 = MW stops in kHz dividing with AM raster. 0 if no MW
No. 9: 010 = AM raster. Steps in kHz. 0 if no AM

If from US or AUS to EU.
No. 0: 001 = variant EU FM. (002 if EU FM/AM)
No. 1: 001 = RDS on, or 000 = RDS off
No. 2: 175 = FM starts in 500 kHz
No. 3: 216 = FM stops in 500 kHz
No. 4: 050 = Deemphas in µs
No. 5: 017 = LW starts in kHz dividing with AM raster. 0 if no LW
No. 6: 031 = LW stops in kHz dividing with AM raster. 0 if no LW
No. 7: 058 = MW starts in kHz dividing with AM raster. 0 if no MW
No. 8: 179 = MW stops in kHz dividing with AM raster. 0 if no MW
No. 9: 009 = AM raster. Steps in kHz. 0 if no AM

If from EU or US to AUS
No. 0: 005 = variant AUS
No. 1: 001 = RDS on, or 000 = RDS off
No. 2: 175 = FM starts in 500 kHz
No. 3: 216 = FM stops in 500 kHz
No. 4: 050 = Deemphas in µs
No. 5: 000 = LW starts in kHz dividing with AM raster. 0 if no LW
No. 6: 000 = LW stops in kHz dividing with AM raster. 0 if no LW
No. 7: 058 = MW starts in kHz dividing with AM raster. 0 if no MW
No. 8: 179 = MW stops in kHz dividing with AM raster. 0 if no MW
No. 9: 009 = AM raster. Steps in kHz. 0 if no AM

ABO-CENTER V/HENRIKSENS ELEKTRONIK

TM20

Checking the display by showing 3 types of letters in 3 rounds until all pixels are used/tested.
Press **PLAY** to shift between icons in the display.

TM21

Opens the signal from AUX-plug to the ML-output.
The display shows "AUX 2 ML".

TM22

Test of key-board functions.
By pressing a key for instance **CD** the display will show "CD".
The testmode can only be ended by IR-remote control command "STOP".
This testmode can only be activated by IR-remote control command.

TM23

Read out of Software version. Press **PLAY** to continue.
AP xx.xxx = Application processor. (Main CPU)
OS xx.xxx = APOS
IO xx.xxx = I/O processor
TU xx.xxx = Tuner processor. (Tuner-FEP)
CD xx.xxx = CD processor. (CD-FEP)

TM24

Service running counter.
First the Stand-by time will appear.
Press **PLAY** to toggle between the different counters.

- St. by time
- Radio-mode time
- CD-mode time
- AUX-mode time
- ML active time
- Theft protection active time

Number of times the theft protection has been unlocked.
Number of times the product has been switched on/off.
All numbers are stated in interval of 10. (e.g. 3 = 30.)
When all counters have been shown the display will ask for a new test mode.

TM25

Opens ML-in.
A source must be selected to have a correct measurement.
Signal coming from the ML-in, exit on the PL and AUX as by normal selection.

ABO-CENTER V/HENRIKSENS ELEKTRONIK

TM27

Service Error detection.
The last registred errors regarding EEPROM, ML, IIC-bus, RS232 driver, CD and lids can be read-out. This test mode is also used for deleting all error-registrations.
To toggle between error indications press **PLAY**. When all errors are read press **PLAY** to reset all errors registered or press **STOP** to keep error register.
By pressing ▲ or ▼ the time for errors will be shown.
YY.MM.DD
hh.mm.ss.
MEM: last EEPROM error.

- 2: EEPROM writes error
- 3: EEPROM reads error
- 4: EEPROM reads error only FF
- 11: EEPROM writes owerflow
- 12: EEPROM controls init fail
- 13: EEPROM controls calloc fail
- 99: EEPROM content error

ML: Last error regarding to ML.

- 8: Link tied down
- 16: Link tied up
- 32: Configuration impossible

IIC: Component which gave the last error regarding IIC-bus.

- 102: Tuner FEP
- 136: Sound Processor
- 208: Clock

SER: The last error from the RS232 driver.

- 02: CDA queue not attached
- 03: CDA error timeout
- 04: CDA error unknown buf addr
- 05: CDA error data expected
- 06: CDA error unknown CMD
- 07: CDA error checksum
- 08: CDA error RX timeout
- 09: CDA error out of buffers
- 10: CDA error uart overrun
- 11: CDA error uart framing
- 12: CDA error uart parity

CD: CD error.

- 2: Focus error
  The CD could not focus within the time limit.
- 3: Radial error
  Set when the CD did not get on track after several retries.
- 4: Turntable motor error
  Set when the disc did not spin up or down within the limit.
- 5: PLL lock error
  Set when PLL is out of lock during tracking mode.
- 6: Jump error
  Set when a seek could not be performed or an error occured during a binary search.
- 7: Subcode error
  Set when a subcode could not be read within the time limit.

ABO-CENTER V/HENRIKSENS ELEKTRONIK

- 8: TOC read error
  Set when the TOC could not be read, no access possible to lead-in.
- 20: Serial communication overrun error
  Expected command byte, but received a data byte.
- 22: Serial communication noise error
  Check did not match.
- 23: Serial communication software error
  Queue full.
- 37: Selection error

OS: Error in the operation system.
- 07: IL TLG from FEP to APOS
- 08: IL TLG from APOS to FEP
- 09: IL RX TX BUF limit
- 13: FEP does not exist

IO: Last error in the I/O driver.
- 01: IIC1 2 error
- 05: Cannot configure FEP
- 06: FEP communication error
- 07: IL TGL from FEP to APOS
- 08: IL TGL from APOS to FEP
- 09: Interlink RX TX BUF limit
- 14: FEP does not exist
- 21: MLSL timeout error
- 22: MLSL TX BUF full TLG does not send
- 23: ML key lost key repaired
- 24: External communication not allowed in preproject
- 25: LSL format error
- 26: LS IR format error
- 27: LSL TX imposs
- 28: LSL link tied up
- 29: LSL link tied down
- 30: Generic ICB error
- 31: ICB L7 timeout
- 32: ICB L7 illegal timeout
- 33: ICB L7 out of repositories
- 34: ICB L7 illegal L7 ack
- 35: ICB L7 Acknowledge unexpected
- 36: ICB L7 read response unexpected
- 37: ICB L7 illegal resource type
- 38: ICB L7 resource still running
- 39: ICB L7 resource already free
- 40: ICB L7 illegal IOP service
- 41: ICB L7 illegal IOP object
- 42: ICB L7 telegram flushed
- 43: ICB L7 resource disabled
- 44: ICB L7 HW clock illegal command
- 45: ICB L7 HW clock illegal event
- 46: ICB L2 retrans limit reached
- 47: IIC component disabled
- 48: Power down of IOP impossible
- 49: CDS bus disabled

ABO-CENTER V/HENRIKSENS ELEKTRONIK

E7: Last error in the main micro-processor.

- 16: Illegal timer ID
- 17: Timer not free
- 21: Illegal date value
- 22: Illegal time value
- 23: Illegal timer parameters
- 32: Illegal simple message ID
- 33: Out of message buffers
- 34: Message buffer virtual limit reached
- 64: Non ISR func. called from ISR
- 65: Physical stack limit reached
- 66: Stack virtual limit reached
- 67: Out of IAS objects
- 68: IAS signal lost
- 69: Overflow in IAS FIFO
- 70: IR queue not attached
- 71: LSL queue not attached
- 72: Scan queue not attached
- 73: Active keyscan queue not attached
- 74: Uart 0 queue not attached
- 75: TIIC queue not attached
- 76: RIIC queue not attached
- 77: Out of power down callback OBJ
- 78: Power down entered with timer running
- 79: Watchdog reset

IOP: Last error in the I/O microprocessor.

- 01: Watchdog reset
- 02: ICB layer 2 timeout
- 03: ICB layer 7 illegal service
- 04 ICB layer 7 illegal object
- 05: Reg mem data frame not valid
- 06: Data frame not valid
- 07: Illegal port ID
- 08: LSL TX impossible
- 09: LSL tied up
- 10: LSL tied down
- 11: IIC slave buffer full
- 12: IIC slave transmit timeout
- 13: IIC illegal switch port
- 14: IIC2 slave addressed
- 15: IIC conditional polling timeout
- 16: IOP IIC error
- 17: PD entered while service waitning
- 18: TP ICBL7 illegal command
- 19: TP module HW error APOS
- 21: TP clock error APOS

ABO-CENTER V/HENRIKSENS ELEKTRONIK

TM28

This TM checks the function of ROM, RAM, EEPROM. (O, A, P).
To readout TM, O and A have to be (+).
E.g. MEM ++- indicates error in the EEPROM.

TM31

Default settings for sale purpose.
Option: 1
Volume: 32
Balance: 0
Bass: 0
Treble: 0
Loudness: OFF
Radio programs erased.
CD settings erased.
Timer settings erased.
After default settings the display shows DEFAULT TM ERROR.
If error occurs in TM the display will show TM ERROR.
Item-number, serial-number, type-number, master pin-code, running counter and all offset adjustments will not be erased.

TM32

ID-readout of the product.
Press **PLAY** to toggle between the ID-numbers.
Item = 7 figures.
Type = 4 figures.
Serial = 8 figures.
MA PIN = OK or ERR.
If error in the readout all figures = 0.

TM34

Option readout.

TM35

Power down ON.
When power down mode is possible the display = TM OK.

TM36

Power down OFF.
When power down mode is not possible the display = TM OK.

ABO-CENTER V/HENRIKSENS ELEKTRONIK

To use CD test modes it is necessary to select CD, in the TM the HF-signal will not be used

TM61

Focus ON.
The CD-pen will try to focus.
This TM can only be turned off by using TM62.

TM62

Focus OFF.
The CD-pen will be turned OFF.

TM63

Starts turntable motor.
This TM can only be turned off by using TM64.

TM64

Turns off the turntable motor.

TM65

Light pen to outermost position.
The optical pickup unit goes to the outermost position and stays there.
This TM can only be turned off by TM66. Do not give other commands in the meantime.

TM66

Light pen to the innermost position.
The optical pickup unit goes to the innermost position and stays there.

TM67

The CD starts playing.

TM68

The CD stops playing.
When error in CD-TM the Error-number refers to TM27 CD-errors.

ABO-CENTER V/HENDRIKSENS ELEKTRONIK

Replacement of CD-mechanism

- Open the glass doors.
- Disconnect the main voltage.
- Dismount the glass doors by pulling forward at the bottom first and then at the top. Take care that the glass door does not scratch the display.
- Remove the seven screws A in the back cover. Pull out the back cover by wrenching the corners C of the back cover to the side.

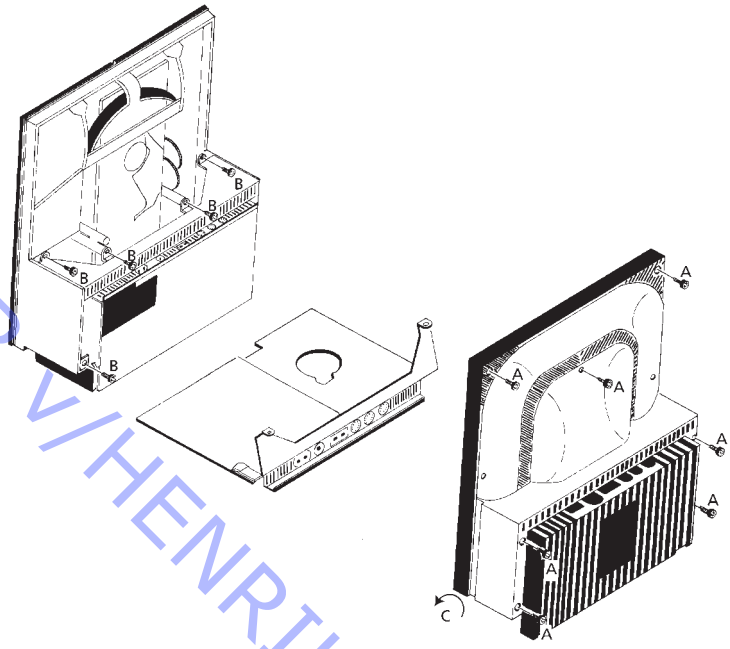

- Dismount the two side front covers by pulling them carefully outwards at the top and bottom until a loud click is heard.
- Click off the CD-front cover.
- Remove the front panel by unscrewing the eight screws E.
- The complete CD-mechanism with CD-servo/decoder PCB can now be lifted out forwards by removing the four screws.
- Dismount the plugs connecting CD-servo/decoder PCB to the CD-interface-PCB and the CD-mechanism with CD-servo/decoder PCB can now be replaced.

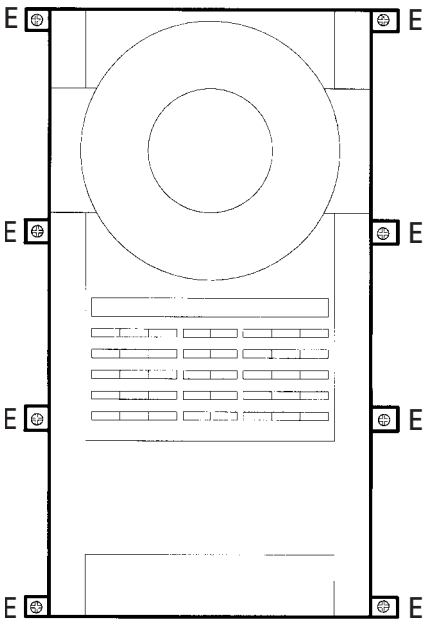

ABO-CENTER V/HENRIKSEN ELEKTRONIK

Removal of gearbox for CD-clamp

The product must not be connected to the mains when dismantling.

- The clamp must be electrically sealed.
- Lift up the clamp manually.
- Dismount the spring R at its bottom most point.
- Dismount the lead to the motor, plug 9P78.
- Loosen the screw S and take out the gearbox.
  Make sure that the two parts of the fitting at the top of the arm Q are pressed completely together when reassembling; then tighten the fitting.

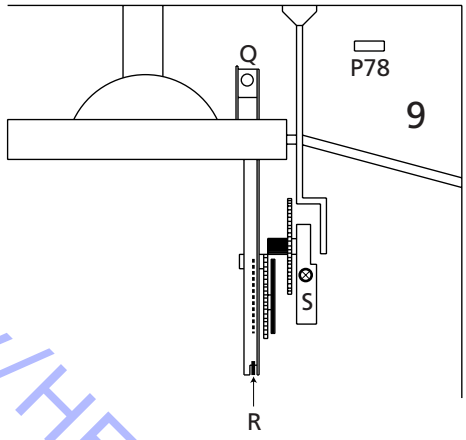

ABO-CENTER V/HENRIKSENS ELEKTRONIK

Mounting of wire for glass doors

- Turn the wire pulley G clockwise until it stops. (Closed door position).
- Turn the wheel H in click position.
- Mount the wire in the wire pulley H (the end with the heavy spring).
- Run the wire in the second innermost groove of the wire pulley H (underneath the pulley), up around the uppermost pulleys (I, J, K and L) and down around the lowermost pulleys (M, N, and O).
- Turn the pulley G anticlockwise.
- Fasten the wire in the pulley H.
- Mount the wire on pulley P and turn pulley G to check that everything is OK.

Readjustment of wire

- Turn the pulley G such that the centre of the pulleys G and H is flush with the upper edge of the tower X.
- Push the wire clamping clip towards the centre and tighten (not too tight).

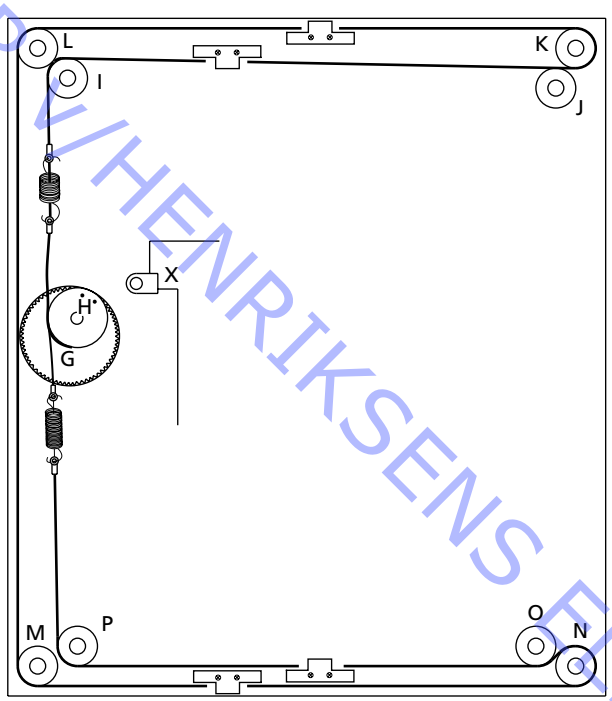

ABO-CENTER V/HENRIKSENS ELEKTRONIK

Adjustment of the glass doors

- Open the glass doors, press ● and wait for the glass doors to close and disconnect main voltage.
- Remove the seven screws A in the back cover. Pull out the back cover by wrenching the corners C of the back cover to the side.
- Remove the five screws B, and lift PCB12/15 out of the cabinet.
- Loosen the top and bottom screws holding the maladjusted glass door on the wire (only one door at the time).
- The maladjusted glass door can now be pushed to the middle-stop and the screws at the top and at the bottom of the glass door have to be tighten firmly.
- Connect the main voltage. Open the glass doors, press ● and wait for the glass doors to close and disconnect main voltage.
- If necessary adjust the other glass door in the same way.
  Note, be careful not to loosen both glass doors at the same time.

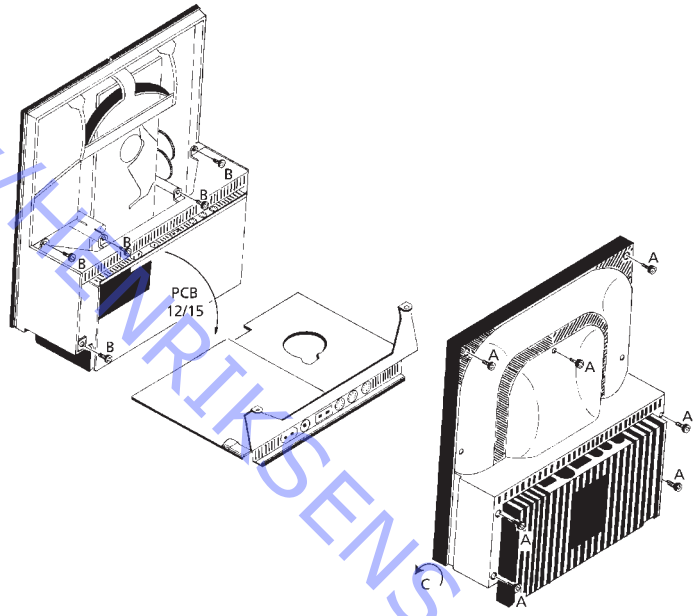

ABO-CENTER V/ HENRIKSENS ELEKTRONIK

Test of Master Link DATA receiver/transmitter

Test of the circuits 12TR30, 12TR31, 12TR52, 12TR53, 12TR55, 12TR56 and 12IC6.

- Lift P107.
- Mount on P4.
- Connect a square-wave generator 10kHz 0-5 V to P107-4 (transmit).
- Measure P107-2 (receive) with an oscilloscope; it should produce the same signal as the one transmitted by P107-4, only here it is delayed by 10-15 µS.

To prevent that products connected via the Master Link socket destroy the data communication in the case of an error in the data interface, the data interface circuit has been designed so that components can be defective without causing a malfunction.
For example, the diodes mounted in connection with Data- and Data+ are protection diodes which will protect against static electricity.

Consequently, when making a repair, it may be necessary to replace/check several components.

If 12TR55 is defective, both 12TR55 and 12TR56 should be replaced and the diodes 12D4, 12D5, 12D19, 12D20, 12D21 and 12D22 should be checked.

If 12TR56 is defective, both 12TR55 and 12TR56 should be replaced and the diodes 12D4, 12D5, 12D19, 12D20, 12D21 and 12D22 should be checked.

If one of the diodes 12D4, 12D5, 12D19, 12D20, 12D21 and 12D22 is defective, all of the diodes should be replaced, and 12TR55 and 12TR56 should be checked.

CD laser current

Across 80R3121 (4.7 ohm) the measurement in mV will show the current in the laser beam. Typical measure; ap. 300 mV. If over 450 mV the laser-head is defect.

Eyepattern

The eyepattern can be measured between 80P1001 pin 5 and 80C2116 (1.3Vpp).

Exchange of microprocessor module PCB3

When exchanging PCB3 remember to insert the EEPROM from the defective module, because it contains valuable data (serial no., type no., PIN-code etc.).
The data is not transferred to the new module untill you have been in contact with the theft protection or after 12 hours connected with mains. This means that you can try out a new PCB3 without transferring the products serial no. Etc..
Note !
When the serial no. has been transferred to the micro-processor it can only be used for this specific product; it must go back to Bang & Olufsen's module repair department as an exchange module to be erased again.
If the product functions are OK the theft protection is also OK; there is no need for testing the functionality of the theft protection.
When the product is connected to mains, wait 20-30 sec. before operating.
All addresses in ML has to be updated after disconnecting mains voltage.

ABO-CENTER V/HENRIKSENS ELEKTRONIK

Theft protection

The theft protection is a 4 digit PIN-code, of the user's own choice, which must be entered if the product has been disconnected from the mains for 15-30 min.
The theft protection is always deactivated from the factory, it is up to the user to activate it.
If the theft protection is activated, and the product has been without mains for 15-30 minutes, the user will be asked to enter the 4 digit PIN-code.
Before the product is handed in to service it is a good idea to ask the customer to deactivate the theft protection.

Service code

If the PIN-code is activated and the product is in a service situation, there is a possibility of 12 hours service by entering a 5 digit Service code which is 11111. This gives 12 hours of full functionality to service the product and make module changes without naming/registering the exchanged modules to the Customer's product. The 12 hours are only running when the product is connected to mains!
If the customer's PIN-code or Master-code is entered the exchanged modules will be named/registered to the product. Registration of the modules cannot be changed.
The service code must be entered when a source is selected and the product asks for the PIN-code "PIN _ _ _ _" press down the ◀◀ (rewind) button for three seconds and the display now writes "PIN _ _ _ _ _", and the Service code 11111 can be entered.

Master code

If the PIN-code has been forgotten (5 tries every 3 hour with mains connected), the only way to unlock the product again is by entering the 5 digit Master code.
The Master code can be ordered at Bang & Olufsen.
When a source is selected and the product asks for the PIN-code "PIN _ _ _ _" press down ◀◀ (rewind) for three seconds and the display asks for 5 digits instead of 4: "PIN _ _ _ _ _" ; enter the 5 digit Master code.

How to order Master code

The Master code is ordered by sending a request either via the Retail System or on the Master code formula, if non of these options are available please contact Bang & Olufsen.

Exchange of microprocessor module PCB3

When exchanging PCB3 remember to insert the EEPROM from the defective module, because it contains valuable data (serial no., type no., PIN-code etc.).
The data is not transferred to the new module untill you have been in contact with the theft protection or after 12 hours connected with mains. This means that you can try out a new PCB3 without transferring the products serial no. Etc.
Note !
When the serial no. has been transferred to the micro-processor it can only be used for this specific product; it must go back to Bang & Olufsen's module repair department as an exchange module to be erased again.
If the product functions are OK the theft protection is also OK; there is no need for testing the functionality of the theft protection.
When the product is connected to mains, wait 20-30 sec. before operating.
All addresses in ML has to be updated after disconnecting mains voltage.

ABO-CENTER V/HENRIKSENS ELEKTRONIK

Exchange of software EEPROM on PCB3

When exchanging the EEPROM on PCB3, the data from the micro-processor will be written into the EEPROM when selecting any source e.g. RADIO.
It is possible to borrow an EEPROM from another BeoSound 3000 to test if there is suspicion of a fault in the original EEPROM. The EEPROM will always adopt the data from the main micro-processor.

Exchange of both micro-processor module PCB3 and software EEPROM on PCB3

If both the micro-processor and the EEPROM need to be exchanged it is necessary to have them pre-programmed from Bang & Olufsen with the correct serial number, otherwise they will not work.
Please contact Bang & Olufsen.

ABO-CENTER V/HENRIKSENS ELEKTRONIK

Important

When the product is reconnected to mains, wait 20-30 sec. before operating.
All adresses in ML has to be updated after disconnecting mains voltage.

Set and enter PIN code

It is your own choice whether or not to activate the PIN code system. However, if you choose to activate the system, your BeoSound 3000 is protected against theft with a four-digit PIN code.
The use of a PIN code means that if your BeoSound 3000 is disconnected from the mains for more than 15-30 minutes, the system can only be activated again by keying in your own personal PIN code.
If the PIN code is not entered, the BeoSound 3000 automatically switches to standby after 3 minutes.
If a wrong PIN code is entered, you get five attempts to key in the code, after which the system is switched off and cannot be switched on for 3 hours.
Should you forget your PIN code, please contact a retailer who can assist you in receiving a Master code from Bang & Olufsen. You need the Master code to reactivate your BeoSound 3000.

Activate the PIN code system

The PIN code system is easily activated, and you choose the four-digit code yourself.
Press ◀◀ **STOP** to key in a four-digit PIN code of your own choice.
NEW PIN appears briefly, and PIN _ _ _ _ appears.
Key in a four-digit PIN code of your own choice.
The PIN code is not displayed.
Press **PLAY** to store the PIN code.
CONFIRM appears briefly, and PIN _ _ _ _ appears. Re-enter your code. The PIN code is not displayed. Press **PLAY** to store.
STORED appears, indicating that your PIN code is stored.

Enter the PIN code

If the PIN code system is activated and your BeoSound 3000 is disconnected from the mains for more than 15-30 minutes, you are requested to key in the four-digit PIN code when the system is first switched on. The cue PIN _ _ _ _ is displayed.
Key in your personal PIN code. The PIN code is not displayed. When the four-digit code has been entered, the display returns to the relevant source e.g. RADIO 1.

Deactivate the PIN code system

You can deactivate the PIN code system at any time. All you need is to enter your PIN code first and then deactivate the system.
Press ◀◀ **STOP** to key in the four-digit PIN code.
PIN _ _ _ _ appears. Key in your personal four-digit PIN code.
The PIN code is not displayed. NEW PIN ? appears.
Press ▲ ▼ to switch the display. PIN OFF appears.
Press **PLAY** to deactivate the PIN code system.
DELETED appears, indicating that the PIN code system is deactivated.

ABO-CENTER V/HENRIKSENS ELEKTRONIK

If you have forgotten your PIN code

If you have forgotten your PIN code, you must contact a retailer who then requests a five-digit Master code from Bang & Olufsen. Once you have keyed in this code, your BeoSound 3000 is operational again and the PIN code system is deactivated.
The cue PIN _ _ _ _ is displayed.
Keep ◀◀ (rewind) pressed down for 3 seconds to open for master code input.
Key in the five-digit Master code. DELETED appears, indicating that the PIN code system is deactivated and the set is ready for use.

Change your PIN code

You can change your PIN code at any time. However, for security reasons it is only possible to change the PIN code five times within a period of 3 hours.
Press ◀◀ ◀◀ **STOP** to key in the four-digit PIN code.
PIN _ _ _ _ appears.
Key in your personal PIN code.
The PIN code is not displayed.
NEW PIN ? appears.
Press **PLAY** to enter a new PIN code.
PIN _ _ _ _ appears.
Key in your new PIN code. The PIN code is not displayed.
Press **PLAY** to store.
CONFIRM appears briefly, and PIN _ _ _ _ appears.
Re-enter your code. The PIN code is not displayed.
Press **PLAY** to store. STORED appears, indicating that your changed PIN code is stored.

ABO-CENTER V/HENRIKSENS ELEKTRONIK

Dismantling

Glass door

- Open the glass doors.
- Disconnect the main voltage.
- Dismount the glass doors by pulling forward at the bottom first and then at the top. Take care that the glass door does not scratch the display.

Rear panel

- Remove the seven screws A in the back cover. Pull out the back cover by wrenching the corners C of the back cover to the side.

Front covers

- Dismount the two side front covers by pulling them carefully outwards at the top and bottom until a loud click is heard (snaplock).

Service position

PCB2 and PCB3

- Remove the five screws B.
- Lift the Power Supply and the Pre Amplifier (PCB12 and PCB15) out of the cabinet.
- Remove the three screws holding the PCB2. Lift up the two PCB's (PCB2 and PCB3).

PCB5

- Release the clamp arm and the clamp from the tab.
- Unscrew the eight screws E holding the centre plate.
  The product is now in service position.

To dismount PCB5 be aware of some details.
- Disconnect 05P41, 42, 44, 45 and 46.
- Unsolder Lamp A and Lamp B.
  (Watch out for the flat cable).

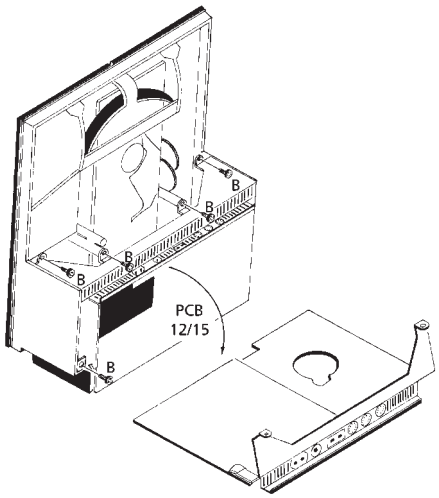

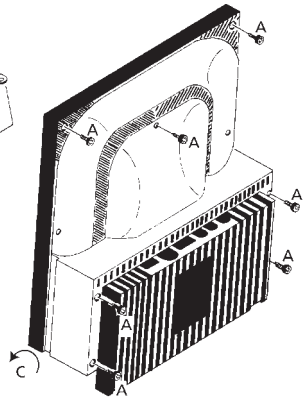

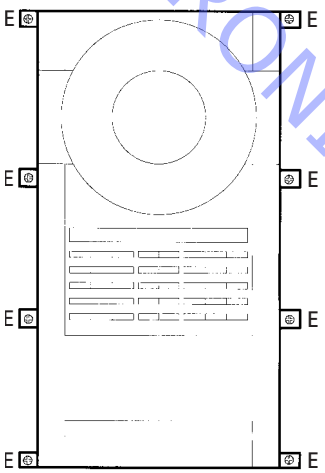

ABO-CENTER V/HENRIKSENS ELEKTRONIK

Insulation test
Each set must be insulation tested after having been dismantled.
Make the test when the set has been reassembled and is ready to be returned to the customer.

Flashovers must not occur during the testing procedure!

Make the insulation test as follows:
Short-circuit the two pins of the mains plug and connect them to one of the terminals of the insulation tester.
Connect the other terminal of the insulation tester to the chassis pin of the headphone socket.

NOTE!
To avoid damaging the set it is essential that both terminals of the insulation tester have good contact.

Slowly turn the voltage control of the insulation tester until a voltage of 2.5kV is obtained. Maintain that voltage for one second, then slowly turn it down again.

Isolationsprüfung
Nach der Zerlegung muß bei jedem Gerät eine Isolationsprüfung vorgenommen werden.
Prüfung vornehmen, wenn das Gerät zusammengebaut und zur Auslieferung an den Kunden bereit ist.

Während der Prüfung dürfen keine Überschläge auftreten!

Isolationsprüfung folgendermaßen vornehmen:
Beide Stifte des Netzsteckers kurzschließen und mit einer der Klemmen des Isolationsprüfers verbinden. Andere Klemme des Isolationsprüfers am Masseanschluß der Kopfhörerbuchse anschließen.

ACHTUNG!
Um Beschädigungen des Geräts zu vermeiden, müssen beide Klemmen des Isolationsprüfers unbedingt einen einwandfreien Kontakt haben.

Spannungseinstellung des Isolationsprüfers langsam auf eine Spannung von 2,5 kV erhöhen. Diese Spannung eine Sekunde beibehalten, anschließend langsam verringern.

Test d'isolement
Il convient de soumettre l'appareil à un test d'isolement après l'avoir démonté.
Ce test est effectué après avoir réassemblé l'appareil et avant de le remettre au client.

Aucune étincelle ne doit se produire lors du test !

Procéder au test d'isolement comme suit :
Court-circuiter les deux broches de la fiche secteur et les raccorder à l'une des bornes du testeur d'isolement.
Raccorder la seconde borne du testeur d'isolement à la broche de masse de la fiche femelle du casque.

ATTENTION !
Pour éviter d'endommager l'appareil, il est important que les deux bornes du testeur d'isolement soient en parfait contact.

Tourner lentement la commande de tension sur le testeur d'isolement jusqu'à arriver à 2,5kV. Maintenir cette tension pendant une seconde, puis la diminuer lentement.

APO-CENTER V. HENRIKSENS ELEKTRONIK